NPC 500-9

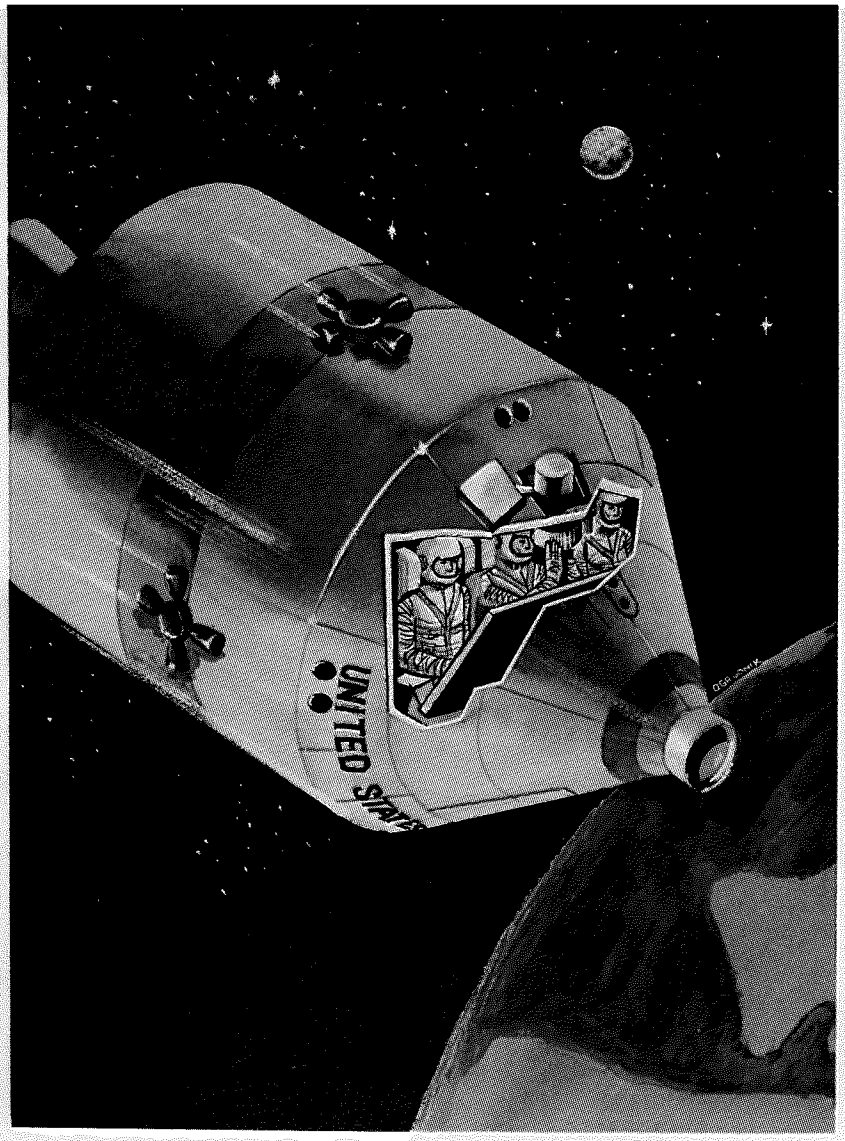

APOLLO EXPERIMENTS GUIDE

JUNE 15, 1965

NATIONAL AERONAUTICS AND SPACE ADMINISTRATION
OFFICE OF MANNED SPACE FLIGHT WASHINGTON, D.C. 20546

ERRATA

The attached page replaces page 3-1 of the "Apollo Experiments Guide," June 15, 1965, NPC 500-9.

3. PROCEDURES

3.1 EXPERIMENT FLOW PATH

Figure 3-1 depicts a typical flow path which experiments follow from submission to launch. Significant milestones in this flow path and events leading to these milestones are explained in the following sections.

3.2 SUBMISSION OF EXPERIMENT PROPOSAL

The experimenter should complete a NASA form entitled Proposal for Space Flight Experiment to describe fully the experiment and equipment, and to define its operation (including power, environmental constraints, location, recoverability, data handling requirements, etc.). The form calls for the inclusion of such information as:

1. A summary of the present state of development of the field of investigation.

2. A clear identification of the parameters to be measured.

3. An analysis of the performance of the measuring apparatus, including linearity, signal-to-noise ratio, dynamic range, and probable error.

4. A discussion of the analysis and interpretation of the data.

5. Delineation of preliminary operational procedures, including crew training and preflight activities, inflight crew actions, spacecraft attitude, rate control requirements, and pointing accuracy.

6. An indication of special trajectory and orbital requirements, communications, recovery needs, and launch site requirements.

The NASA form may be obtained from:

Executive Secretary
Manned Space Flight Experiments Board, Code MTX
Office of Manned Space Flight
NASA Headquarters
Washington 25, D. C.

The completed NASA form from sources in universities, industry, and Government installations other than NASA field centers should be submitted to:

Director of Grants and Research Contracts, Code SC
National Aeronautics and Space Administration
Washington, D. C. 20546

Experiment proposals from NASA field centers will be processed according to established procedures through the center Experiments Offices.

Experiment proposals are then reviewed by NASA Headquarters Program Offices to determine their disciplinary merit (Milestone 1 , Figure 3-1).

Nominal schedules for the submission of experiment proposals for inclusion in the Apollo-Saturn 200 series and Apollo-Saturn 500 series flight programs are shown in Figure 3-2.

3.3 DETERMINATION OF DISCIPLINARY MERIT

Experiment proposals are reviewed for their disciplinary merit according to the criteria set forth in Section 2.1.3. This review is conducted by NASA Headquarters Program Offices, including the Office of Space Science and Applications, Office of Advanced Research and Technology, and the Office of Manned Space Flight, Space Medicine Division. In addition,

APOLLO

EXPERIMENTS

GUIDE

Office of Manned Space Flight
Washington, D.C.

For sale by the Superintendent of Documents, U.S. Government Printing Office
Washington, D.C., 20402 - Price $1

TABLE OF CONTENTS

Paragraph	Title	Page
1.	INTRODUCTION	1-1
2.	PROGRAM POLICY	2-1
2.1	EXPERIMENT EVALUATION	2-1
2.2	CONTRACTUAL	2-1
2.2.1	Funding	2-1
2.2.2	NASA Technical Monitor	2-1
2.2.3	Delivery Dates	2-1
2.3	OPERATIONAL	2-1
2.3.1	Primary Mission Objectives	2-1
2.3.2	Development Mission Objectives	2-1
2.3.3	Crew Participation	2-1
2.3.4	Access to Experiment Equipment	2-2
3.	PROCEDURES	3-1
3.1	EXPERIMENT FLOW PATH	3-1
3.2	SUBMISSION OF EXPERIMENT PROPOSAL	3-1
3.3	DETERMINATION OF DISCIPLINARY MERIT	3-1
3.4	DETERMINATION OF TECHNICAL FEASIBILITY	3-2
3.5	APPROVAL OF EXPERIMENTS PACKAGE	3-2
3.6	IMPLEMENTATION	3-2
4.	MISSIONS	4-1
4.1	INTRODUCTION	4-1
4.2	APOLLO-SATURN 200 SERIES MISSIONS	4-1
4.2.1	General	4-1
4.2.2	Apollo-Saturn 200 Series Earth Orbital Missions	4-1

TABLE OF CONTENTS (CONT.)

Paragraph	Title	Page
4.3	APOLLO-SATURN 500 SERIES MISSIONS	4-4
4.3.1	General	4-4
4.3.2	Lunar Landing Mission	4-4
5.	SPACECRAFT	5-1
5.1	GENERAL DESCRIPTION	5-1
5.2	COMMAND MODULE	5-1
5.2.1	General Description	5-1
5.2.2	Experiment Locations in the Command Module	5-4
5.3	SERVICE MODULE	5-4
5.3.1	General Description	5-4
5.3.2	Experiment Locations in the Service Module	5-4
5.4	LUNAR EXCURSION MODULE	5-8
5.4.1	General Description	5-8
5.4.2	Experiment Locations in the Lunar Excursion Module	5-8
6.	SATURN LAUNCH VEHICLES	6-1
6.1	SATURN IB VEHICLE	6-1
6.1.1	General Description	6-1
6.1.2	Saturn IB Experiment Locations	6-1
6.2	SATURN V VEHICLE	6-4
6.2.1	General Description	6-4
6.2.2	Saturn V Experiment Locations	6-4
7.	SPACE VEHICLE AND EXPERIMENT EQUIPMENT TECHNICAL CONSIDERATIONS	7-1
7.1	GENERAL	7-1
7.2	SPACE VEHICLE SUBSYSTEMS CAPABILITIES	7-1
7.2.1	Electric Power and Energy	7-1
7.2.2	Data Transmission	7-2
7.2.3	Umbilical Connections	7-2

TABLE OF CONTENTS (CONT.)

Paragraph	Title	Page
7.2.4	Display and Control	7-2
7.2.5	Thermal Control of Experiment Equipment	7-3
7.2.6	Observation Windows	7-3
7.3	EQUIPMENT DESIGN CONSIDERATIONS	7-4
7.3.1	Attitude Modes	7-4
7.3.2	Environmental Design Considerations	7-5
7.3.3	Selection of Materials	7-6
7.3.4	Electromagnetic Interference	7-6
7.3.5	Hazardous Conditions	7-6
7.3.6	Quality Assurance and Testing Program	7-6

LIST OF ILLUSTRATIONS

Figure	Title	Page
3-1	Experiments Flow Path	3-3
3-2	Experiment Schedules	3-5
4-1	Saturn IB and Saturn V Configuration	4-2
4-2	Earth Orbital Mission Description and Earth Track	4-5
4-3	Earth Vicinity and Translunar Mission Description (Typical Early Lunar Landing Mission)	4-11
4-4	Lunar Vicinity Mission Description (Typical Early Lunar Landing Mission)	4-13
4-5	Transearth and Re-entry Mission Description (Typical Early Lunar Landing Mission)	4-15
4-6	Typical Earth Track During Apollo Mission	4-17
5-1	Spacecraft, Lunar Mission Configuration	5-2
5-2	Command Module	5-3
5-3	Command Module, Experiment Equipment Stowage	5-5
5-4	Command Module, Air Lock Experiment Configuration	5-6
5-5	Command/Service Module, Experiment Pallet and Location	5-7
5-6	Lunar Excursion Module, Experiment Equipment Stowage	5-9
6-1	Saturn IB Launch Vehicle, Experiment Locations	6-2
6-2	Saturn V Launch Vehicle, Experiment Locations	6-5

LIST OF TABLES

Table	Title	Page
4-1	Summary of Typical Mission Characteristics for Apollo-Saturn 200 Series Missions	4-3
4-2	Nominal Mission Phase Trajectory Characteristics Summary, Apollo-Saturn 200 Series Missions	4-4
4-3	Typical Characteristics of Apollo-Saturn 500 Series Missions	4-7
4-4	Mission Phase Trajectory Characteristics Summary, Apollo-Saturn 500 Series Mission	4-8

1. INTRODUCTION

This Apollo Experiments Guide describes guidelines of the National Aeronautics and Space Administration (NASA) pertinent to experimentation on Apollo space flights and defines the procedures and requirements for submittal of experiment proposals. Information on the Apollo Program, including missions and vehicles, acquaints the experiment originator with vehicle capabilities and opportunities for experiments.

The space vehicle used for Apollo missions consists of a Saturn launch vehicle and an Apollo spacecraft. An earlier version of the launch vehicle is known as the Saturn IB, and the advanced launch vehicle that will eventually be used for translunar flight is known as Saturn V. Both configurations are shown in Figure 4-1 and are described in more detail in Section 6 of this guide.

The payload for the above launch vehicles consists of an Apollo spacecraft, which ultimately will include a Command Module, Service Module, and Lunar Excursion Module. A more detailed description of the spacecraft is found in Section 5.

Details of typical Apollo-Saturn 200 and 500 series development missions and the Apollo-Saturn 500 series manned lunar landing missions are provided in Section 4. Apollo-Saturn 500 series development missions are similar to Apollo-Saturn 200 series missions.

In the Apollo flights which can accommodate experiments, a premium space of at least 2.5 cubic feet with a weight allowance of approximately 80 pounds is reserved in the Command Module. On lunar landing missions most of the 80-pound capacity in the Command Module will be utilized for the return of lunar samples from the moon. In addition, other volumes in the Command Module, Service Module, Lunar Excursion Module, and launch vehicle are available. Although recovery of experiments placed aboard the launch vehicle is not possible, the launch vehicles offer attractive possibilities for certain types of experiments. Each Apollo flight with an earth orbit mission places the S-IVB launch vehicle stage and Instrument Unit into a decay orbit which provides possibilities for the conduct of experiments lasting several orbits.

The inclusion of experiments on certain Apollo missions is contingent upon weight allowances and other technical requirements being satisfied. It is not possible to specify weight, power, and other provisions for each potential experiment location since proposed experiments must be evaluated for their combined effect on vehicle performance.

2. PROGRAM POLICY

2.1 EXPERIMENT EVALUATION

Experiment proposals will be reviewed by NASA and evaluated in accordance with the following criteria:

1. The disciplinary merit of the proposed investigation, including its desirability, its relationship to other experiment activity, its probability of success, and its cost in relation to the expected results.

2. Demonstration of competence of the experimenter to perform the experiment, including his research facilities, supporting scientists and technicians, and complexity and state of the art of his instrumentation.

3. The capabilities and constraints of the spacecraft and/or the launch vehicle, and of the crew.

4. The completeness of the experimenter's proposal.

2.2 CONTRACTUAL

2.2.1 Funding

In most cases, experiments selected for the Apollo Program will be funded by NASA to cover those expenses essential to preparing the investigation for flight and for post-flight analysis. Funding will usually be offered by a NASA Field Center in the form of a cost reimbursement contract with a statement of the experimenter's obligations to NASA.

2.2.2 NASA Technical Monitor

Each experiment will be assigned a NASA technical monitor to assist the experimenter in working with NASA technical and administrative staff members and with the space vehicle contractors to assure proper coordination of schedules, technical interfaces, documentation, and support activities.

2.2.3 Delivery Dates

It is the responsibility of the sponsoring NASA office to assure that schedule delivery dates for design and installation drawings, mockups, flight equipment, and documentation are met. Because of the stringent program and mission requirements, it is incumbent upon the experimenter to meet all scheduled milestones. The sponsoring NASA office and the technical monitor will assist the experimenter in this regard.

2.3 OPERATIONAL

2.3.1 Primary Mission Objectives

The primary mission of the Apollo Program has the specific objective of placing two men on the moon for exploration and providing for their safe return to earth. It is intended that this mission will provide ability to locate scientific payload(s) on the lunar surface for the purpose of conducting experimentation and observation and to return scientific data and samples to earth.

2.3.2 Development Mission Objectives

Earlier Apollo missions are programmed to confirm spacecraft and launch vehicle compatibility and performance and to qualify systems for lunar landing capability. Experiments will be conducted during these missions to the maximum extent possible without compromising the principal mission objectives.

2.3.3 Crew Participation

Participation of the flight crew should be utilized to enhance the content

of data gathered by the experiments. The crew will be available for experiment control at times when the spacecraft is not undergoing dynamic mission phases or other periods requiring high crew activity.

2.3.4 Access to Experiment Equipment

Servicing of experimental equipment during final launch preparation or countdown must be carefully coordinated with launch operations personnel and should be avoided if possible.

3. PROCEDURES

3.1 EXPERIMENT FLOW PATH

Figure 3-1 depicts a typical flow path which experiments follow from submission to launch. Significant milestones in this flow path and events leading to these milestones are explained in the following sections.

3.2 SUBMISSION OF EXPERIMENT PROPOSAL

The experimenter should complete NASA Form 1067 in detail, using supplemental sheets as necessary, to fully describe the experiment and equipment, and define its operation (including power, environmental constraints, location, recoverability, data handling requirements, etc.). A concise supplementary narrative covering the following items should accompany the proposal:

1. A summary of the present state of development of the field of investigation.

2. A clear identification of the parameters to be measured.

3. An analysis of the performance of the measuring apparatus, including linearity, signal-to-noise ratio, dynamic range, and probable error.

4. A discussion of the analysis and interpretation of the data.

5. Delineation of preliminary operational procedures, including crew training and preflight activities, inflight crew actions, spacecraft attitude, rate control requirements, and pointing accuracy.

6. A brief indication of special trajectory and orbital requirements, communications, recovery needs, and launch site requirements.

NASA Form 1067 may be obtained from:

Executive Secretary
Manned Space Flight Experiments Board, Code MB
Office of Manned Space Flight
NASA Headquarters
Washington 25, D.C.

Completed NASA Form 1067 from sources in universities, industry, and Government installations other than NASA field centers should be submitted to:

Director of Grants and Research Contracts, Code SC
National Aeronautics and Space Administration
Washington, D.C. 20546

Experiment proposals from NASA field centers will be processed according to established procedures through the center Experiments Coordination Office.

Experiment proposals are then reviewed by NASA Headquarters Program Offices to determine their disciplinary merit (Milestone 1, Figure 3-1).

Nominal schedules for the submission of experiment proposals for inclusion in the Apollo-Saturn 200 series and Apollo-Saturn 500 series flight programs are shown in Figure 3-2.

3.3 DETERMINATION OF DISCIPLINARY MERIT

Experiment proposals are reviewed for their disciplinary merit according to the criteria set forth in Section 2.1.3. This review is conducted by NASA Headquarters Program Offices, including the Office of Space Science and Applications, Office of Advanced Research and Technology, and the Office of Manned Space Flight, Space Medicine Division. In addition,

Experiment Proposals are reviewed by the Space Science Steering Committee comprised of representatives of several subcommittees on specialized scientific fields. Similarly, Medical Experiments Proposals are reviewed by the Medical Experiments Panel comprised of representatives of several offices cognizant of the operational and technical aspects of inflight medical experiments. Once an experiment proposal is endorsed by the cognizant reviewing Program Office, that office becomes the experiment sponsor and submits the experiment proposal to the Manned Space Flight Experiments Board (MSFEB). The MSFEB consists of the following members:

Associate Administrator, Manned Space Flight

Associate Administrator, Space Science and Applications

Associate Administrator, Advanced Research and Technology

Director, Space Medicine, Office of Manned Space Flight

Director, Advanced Manned Missions, Office of Manned Space Flight

Director, Marshall Space Flight Center

Director, Manned Spacecraft Center

Deputy Commander for Space, Air Force Systems Command

The MSFEB considers the experiment proposal in relation to the national space program requirements and its interactions with other proposed experiments. The MSFEB then gives the experiment tentative approval for inclusion in the experiments program and recommends determination of technical feasibility (Milestone 2).

3.4 DETERMINATION OF TECHNICAL FEASIBILITY

Based on the recommendation of the MSFEB and the approval of the Associate Administrator for Manned Space Flight, the Director of the Apollo Program forwards the experiment proposal to the cognizant Office of Manned Space Flight Field Center, Manned Spacecraft Center (MSC), or Marshall Space Flight Center (MSFC), for technical feasibility studies. These studies will establish the feasibility of carrying this and other experiments on a specific Apollo mission and the requirements which must be imposed on the experiment equipment and procedures. The reviewing Center then reports the results of their studies to the Apollo Program Director, who in turn recommends approval of an experiments package to the MSFEB (Milestone 3).

3.5 APPROVAL OF EXPERIMENTS PACKAGE

The MSFEB considers the recommended experiments package for each flight, modifies it if necessary, and recommends approval of the package for a specific flight to the Associate Administrator for Manned Space Flight. Following approval of an experiments package (Milestone 4), the Apollo Program Director authorizes implementation of the experiments on the space vehicles (Milestone 5).

3.6 IMPLEMENTATION

Once an experiment has been authorized for implementation on a specific vehicle, contractual relationships between the NASA sponsoring office and the experimenter are completed and the cognizant Field Center provides a technical monitor to assist the sponsor/experimenter in preparing the experiment for flight. Among the prime considerations which each experiment must undergo during the implementation period are interface technical requirements

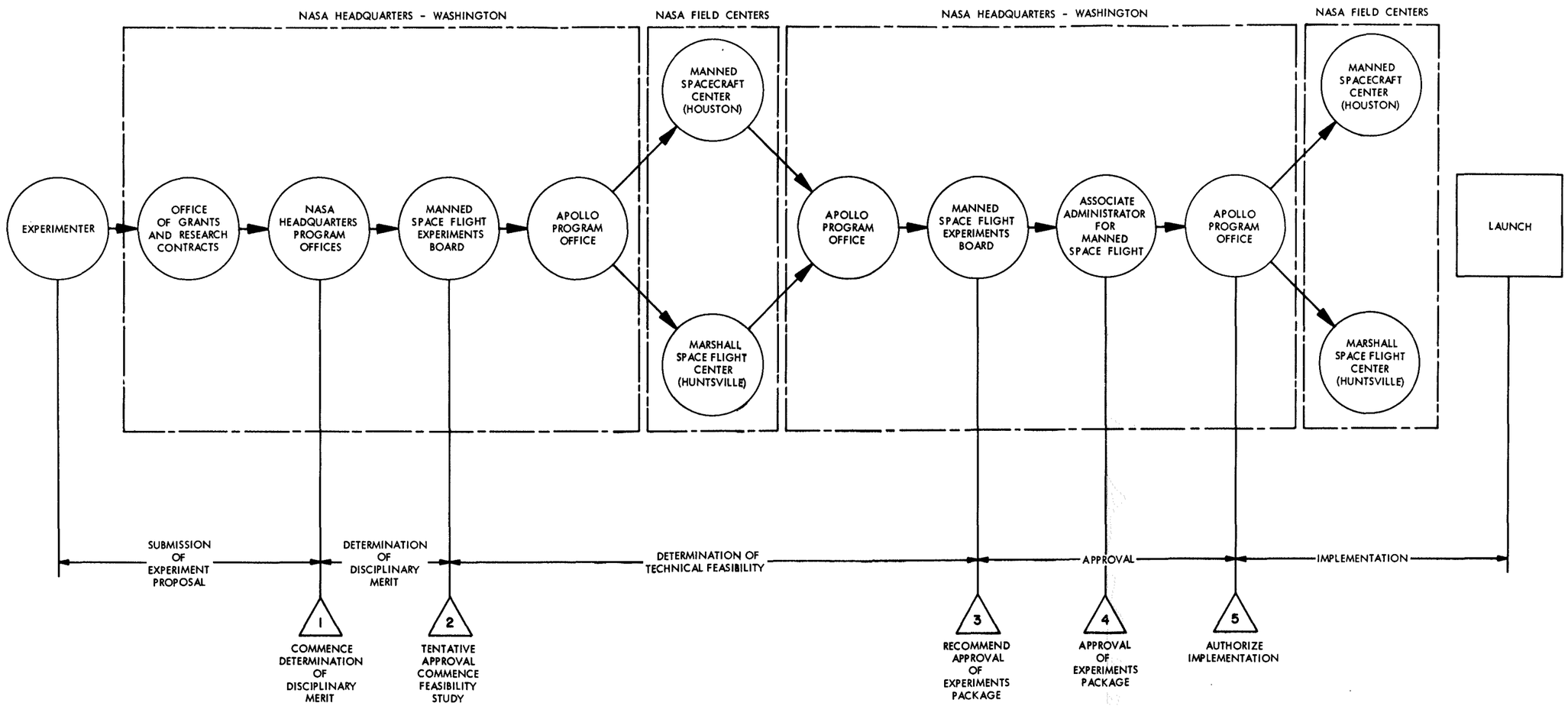

Figure 3-1. Experiments Flow Path

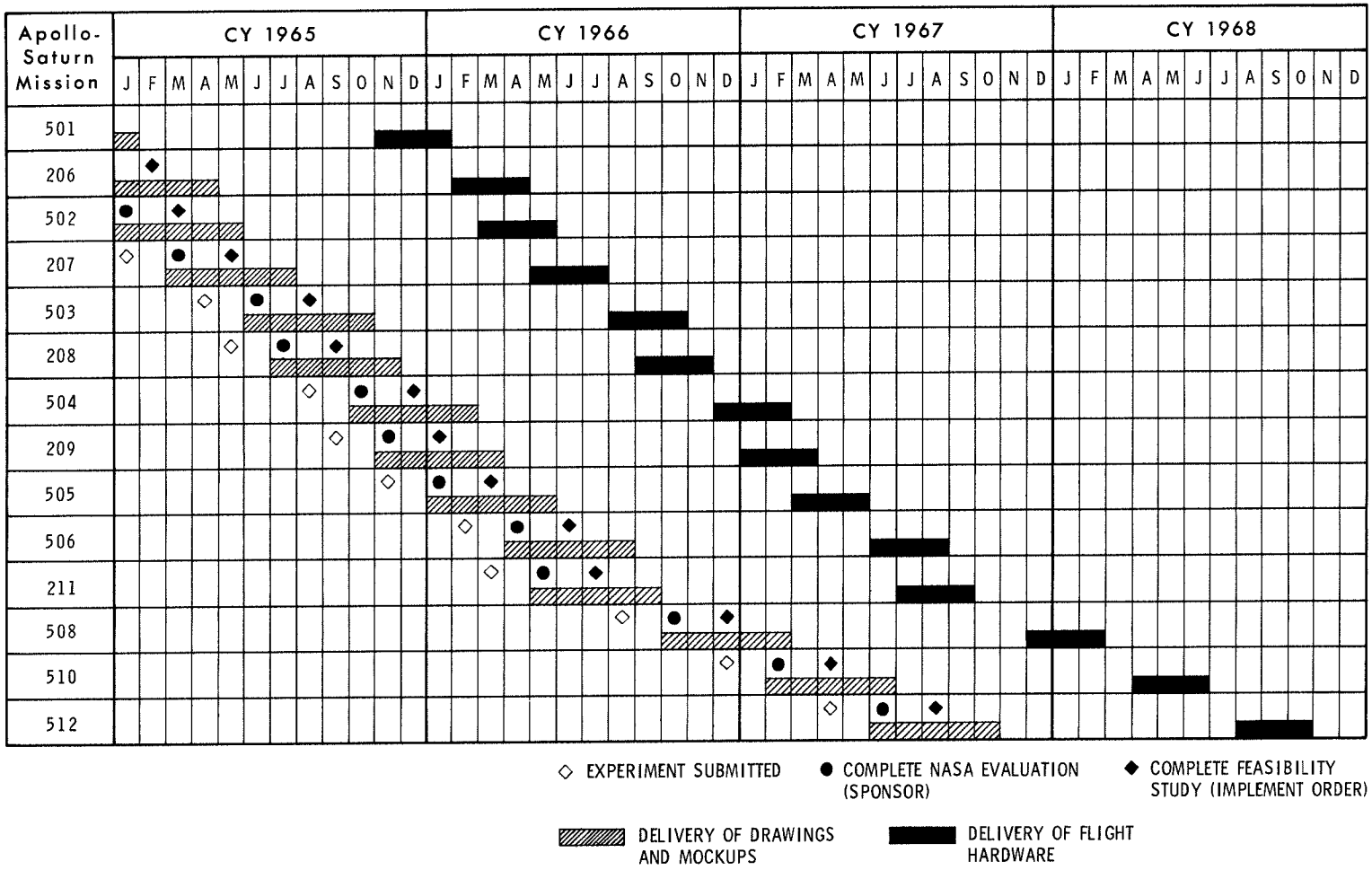

Figure 3-2. Experiment Schedules

(packaging and installation specifications), flight qualifications requirements, and achievement of schedule milestones. The latter consideration is emphasized by a requirement for the Center to provide complete status of each experiment to the Apollo Program Office. The implementation phase of an experiment will require much close personal coordination between the experimenter, sponsor, technical monitor, and other center personnel in order to meet all experiment flight requirements.

4. MISSIONS

4.1 INTRODUCTION

The primary mission of the Apollo Program is to place two men on the moon for scientific exploration and return them safely to earth. Prior to this, numerous test missions will be flown to gather fundamental information on the space environment, verify design concepts and hardware performance, and train astronauts and ground personnel in operating procedures. These missions will be accomplished using the Apollo space vehicles shown in Figure 4-1.

The complete Apollo spacecraft for most of these missions is composed of three modules: the Command Module, the Service Module, and the Lunar Excursion Module. Initially, the Apollo-Saturn 200 series development missions will use the two-stage Saturn IB launch vehicle. As the program progresses, the Apollo-Saturn 500 series missions, using the three-stage Saturn V launch vehicle, will begin. Manned lunar landing will be accomplished with the Saturn V vehicle after successful completion of required development missions.

4.2 APOLLO-SATURN 200 SERIES MISSIONS

4.2.1 General

The Apollo-Saturn 200 series earth orbital missions are planned to increase flight crew proficiency and to confirm the compatibility and performance of the spacecraft and launch vehicle. The individual missions will be determined by the objectives for a given flight; the initial flights being unmanned and the later flights manned after qualification of the Saturn IB. Earth orbital missions will range from unmanned, suborbital to manned orbital missions; duration will vary from one orbit to missions extending up to 14 days. The inflight experimental capability for these missions will depend upon the mission objectives, the Engineering and Development instrumentation requirements, and the resultant experimental volume and weight availability.

A summary of typical mission characteristics for Apollo-Saturn 200 series missions now planned which are available for new experiments is listed in Table 4-1. As the presently planned missions are conducted, new missions will be designated to meet program requirements. Table 4-2 summarizes the principal Apollo-Saturn 200 series mission trajectory characteristics.

4.2.2 Apollo-Saturn 200 Series Earth Orbital Missions

The mission sequence and events for a representative Apollo-Saturn 200 series earth orbital mission (Apollo-Saturn 206) are shown in Figure 4-2. With changes in launch azimuth for varying missions, the actual ground track may differ from that shown in the figure.

The launch phase begins with the ignition of the S-I first stage and continues through burnout of the S-IVB second stage. After achieving orbital velocity, the spent S-IVB stage and attached Instrument Unit are jettisoned and left in a decay orbit. While in earth parking orbit, the astronauts in the Command Module verify systems performance before proceeding with the mission. The maneuvers, tests, and other operations carried out during earth orbit vary according to the individual mission requirements. Mission duration will vary from a few hours to two weeks. During earth orbit the astronauts maintain communications and data exchange with the Near-Earth Instrumentation Facilities.

Prior to initiating re-entry, timing and flight conditions are precomputed

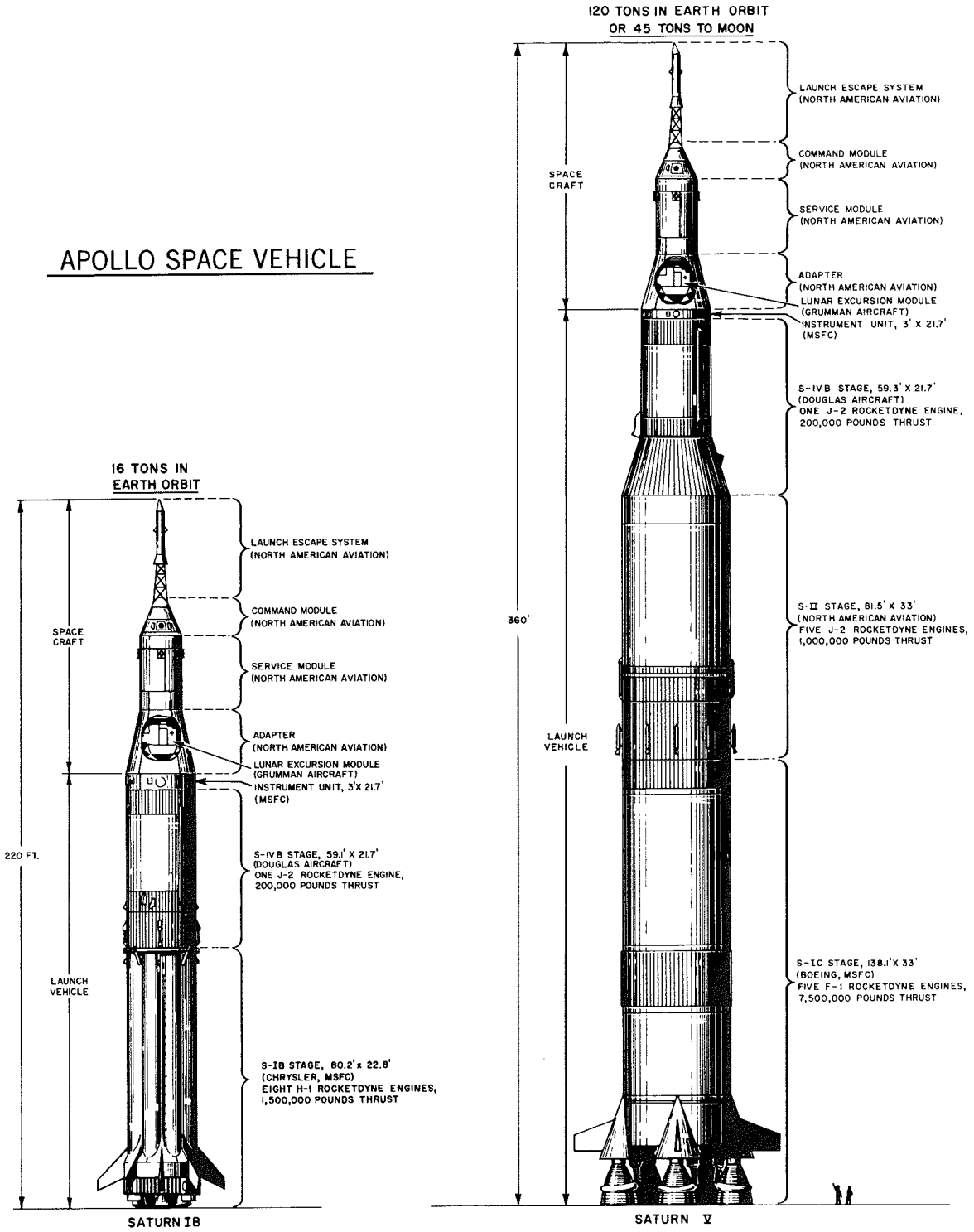

Figure 4-1. Saturn IB and Saturn V Configuration

Table 4-1

Summary of Typical Mission Characteristics for Apollo-Saturn 200 Series Missions

Type	Early Development Flights (Manned)	LEM Development Flights (Unmanned)	Advanced Development Flights (Manned)
Structures placed in orbit	Command Module, Service Module, Instrument Unit, S-IVB Stage	LEM	Command Module, Service Module Instrument Unit, S-IVB Stage, LEM
Profile	Earth Orbital Insert into 105-nautical mile circular orbit Separation of the Command and Service Modules from the Instrument Unit and S-IVB Stage. Use Service Module Propulsion System to achieve higher orbit (approximately 140-nautical mile circular). Use Service Module Propulsion System to de-orbit. Separation of Service Module from Command Module. Re-entry. Recover Command Module.	Earth Orbital Insert into 105-nautical mile circular orbit. Evaluate LEM systems.	Earth Orbital Insert into 105-nautical mile circular orbit. Transposition and docking of the Lunar Excursion Module. Separation of the Command, Service, and Lunar Excursion Modules from the Instrument Unit and S-IVB Stage. I: Rendezvous and docking operations. (Command and Service Modules active.) Lunar Excursion Module propulsion operations. II: Rendezvous and docking operations. (Lunar Excursion Module active.) Use Service Module Propulsion System to de-orbit. Separation of Service Module from Command Module. Re-entry. Recover Command Module.
Flight Azimuth	72 Degrees	72 Degrees	72 Degrees
Flight Duration	Long duration mission 10 to 14 days	Less than 1 day	Up to 3 days
Launch Complex	34	37	37

to yield a safe return trajectory to a preselected landing site. The Service Module propulsion system supplies the required retro velocity impulse to initiate re-entry. The Service Module is subsequently separated and abandoned, and the Command Module continues on its re-entry path to the preselected water landing site. Parachutes are used to slow the rate of descent below altitudes of 24, 000 feet.

4.3 APOLLO-SATURN 500 SERIES MISSIONS

4.3.1 General

A summary of typical characteristics for Apollo-Saturn 500 series missions which have been assigned is listed in Table 4-3. The particular mission plans for subsequent missions will be established as program requirements evolve. These missions may include further earth orbital missions, lunar orbit missions, and lunar landing missions. Table 4-4 summarizes the principal mission trajectory characteristics.

4.3.2 Lunar Landing Mission

Completion of the preliminary earth orbital flights will be followed by the Apollo lunar landing mission. A typical early lunar landing mission is

Table 4-2

Nominal Mission Phase Trajectory Characteristics Summary, Apollo-Saturn 200 Series Missions

Phase Description	Elapsed Time Hours	Altitude Nautical Miles	Velocity Ft/Sec
Liftoff	0	0	0
Earth orbit insertion	0.2	105	25, 550
Orbital maneuvers	h*	105**	25, 550
Jettison SM	h + 0.2	381, 000 ft	25, 000
Re-entry	h + 0.5	381, 000 ft	25, 000
Earth landing	h + 0.8	0	25

* h hours, depending upon mission which could extend up to 14 days.
**Based on circular orbit.

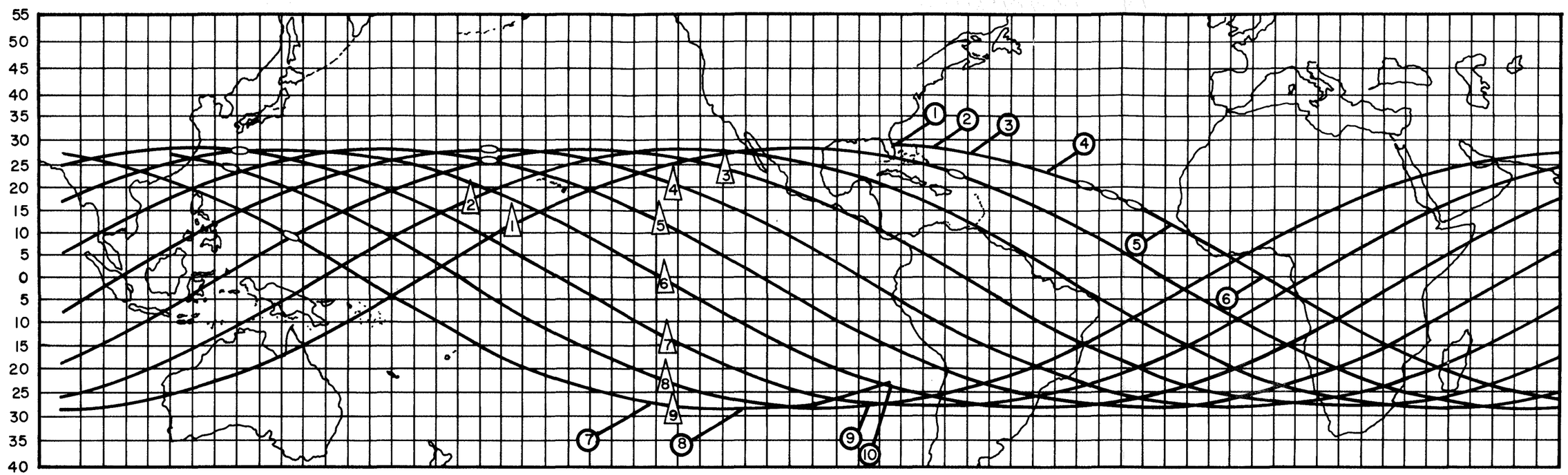

MISSION SEQUENCE

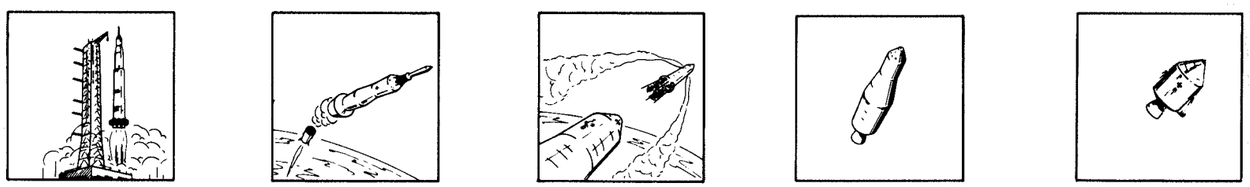

1 Liftoff

2 First Stage Cut-Off & Separation

3 LES Jettison

4 Begin S-IVB Thrusting

5 Check Out in Earth Orbit

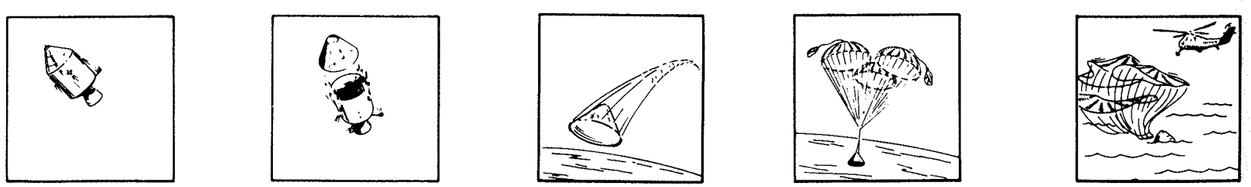

6 Orbital Operations

7 Jettison SM

8 Entry

9 Jettison Drogue Chutes-Main Chute Deployment

10 Earth Landing

Key:

Orbital Sequence △

Mission Sequence ○

Figure 4-2. Earth Orbital Mission Description and Earth Track

Table 4-3

Typical Characteristics of Apollo-Saturn 500 Series Missions

Type	Early Development Flights (Unmanned)	Advanced Development Flights (Manned)
Structure placed in orbit	Command Module Service Module Lunar Excursion Module FTA-2 Instrument Unit S-IVB Stage	Command Module Service Module Lunar Excursion Module Instrument Unit S-IVB Stage
Profile	Saturn V Development Escape Velocity/Re-entry Insert into 100-nautical mile circular orbit. After achieving circular orbit inject into an elliptical orbit. Separation of Command, Service, and Lunar Excursion Modules from the Instrument Unit and S-IVB Stage. Use Service Module Propulsion System to achieve desired re-entry conditions. Separation of Service Module from Command Module. Re-entry. Recover Command Module.	Lunar Mission Simulation in Earth Orbit
Flight Azimuth	72 Degrees	72 Degrees
Flight Duration	1/2 to 10 days	7 to 10 days
Launch Complex	39	39

Table 4-4

Mission Phase Trajectory Characteristics Summary,
Apollo-Saturn 500 Series Mission

Phase Description	Elapsed Time (Hours) (Approx)	Altitude Nautical Miles	Velocity Ft/Sec
Liftoff	0	0	1,340
Earth Orbit Insertion	0.2	100	25,580
Begin Translunar Injection on Second Orbit	3.0	106	25,555
Begin Coast to Transposition	3.1	167	35,621
Jettison S-IVB and Begin Coast to Lunar Orbit Insertion	3.8	6,206	21,994
Begin Lunar Orbit Insertion	64.3	103*	8,431
LEM/CSM Separation on Second Orbit	68.1	83.1*	5,279
Begin Coast to Initiation of Powered Descent	68.4	83.1*	5,178
Begin Powered Descent	69.4	49,534 ft*	5,587
Touchdown	69.5	0*	3.6
Begin Powered Ascent on 20th CSM Orbit	104.3	0*	15
Begin Docking	105.3	82.9*	5,276
Begin Lunar Orbit Coast to Transearth Injection	105.7	83.9*	5,279
Jettison LEM	106.2	83.4*	5,282
Begin Transearth Coast	109.2	83.4*	8,013
Jettison SM	198.0	2,447	28,160
Entry	198.3	380,760 ft	36,048
Earth Landing	198.6	0	25

*Lunar altitude (measured above the landing site radius).

shown in Figures 4-3, 4-4, and 4-5. The following paragraphs and Table 4-4 will present a more detailed account of the events and operations which comprise a nominal Apollo-Saturn 500 series lunar landing mission using the Lunar Orbital Rendezvous (LOR) mode. A typical ground track of the vehicle showing regions of tracking and communications is shown in Figure 4-6. The ground track for each mission will vary according to the individual mission conditions.

The launch phase (1)* begins with the ignition of the S-IC first stage and ends approximately 12 minutes later with the S-IVB third stage first-burn engine cutoff, with the spacecraft and attached S-IVB inserted into earth parking orbit (5).

The duration of the earth parking orbit will be not less than one and not more than three revolutions, with injection into the translunar trajectory (6) occurring nominally during the second revolution. During earth parking orbit, the spacecraft maintains communications and data exchange with tracking and communication facilities around the earth and is under the command control of the Mission Control Center - Houston (MCC-H).

Injection into translunar trajectory is accomplished by re-igniting the S-IVB third stage for a second thrusting period lasting approximately five minutes.

Approximately 15 minutes after injection, the transposition maneuver is initiated (8). The maneuver results in the jettisoning of the spent S-IVB and Instrument Unit and the moving of the LEM to the apex of the CM. Completion of this maneuver allows access between the LEM and CM and permits use of the SM propulsion system for subsequent maneuvers. The translunar trajectory phase lasts 60 to 80 hours and includes up to three midcourse corrections to refine the trajectory (11, 12, 13).

As the spacecraft passes behind the moon, the SM propulsion system is used to place the spacecraft in a circular lunar orbit of 80 nautical miles altitude (15). After two lunar orbits have been completed, during which the preselected landing site is surveyed and the spacecraft systems are checked, the LEM is separated with two crewmen aboard. The LEM propulsion system is then fired briefly (17) to place the LEM in an orbit which will carry it down to an altitude of 50,000 feet. When the altitude of 50,000 feet is reached, the LEM propulsion is utilized again to perform the powered descent and touchdown maneuvers (22). Upon landing, the astronauts check the vehicle and make preliminary preparation for launch before proceeding with scientific observations, experiments, and collection of lunar samples. Television pictures of the moon taken by the astronauts will be relayed back to earth and will be reconstituted to conform with United States broadcasting standards.

With the present system capabilities of the LEM, a lunar stay time of 35 hours is possible. However, only a portion of this time is available for scientific exploration because of constraints such as sleep requirements, limitation of personnel life support system (PLSS), and recharge time of the PLSS units. The current life-support period of a PLSS unit is four hours including a

*Numbers in parentheses refer to mission events depicted in Figures 4-3, 4-4, and 4-5.

one-hour contingency factor plus a six-hour time period for recharge.

Other time periods in the lunar stay time are allotted to status briefs, data analysis, and system checkout prior to launch. During these periods, the astronauts on the lunar surface would exchange essential information with the Mission Control Center at MSC and with the CSM in lunar orbit.

Following the current set of constraints, a 35-hour lunar surface stay time would allow four excursions on the lunar surface of three hours each, or a total of 12 man-hours.

At the end of the exploration period, the astronauts will commence countdown for launch of the LEM. The LEM is launched into a transfer orbit which will result in rendezvous with the CSM. After rendezvous and docking are completed, the two LEM crew members along with their scientific samples and data are transferred to the CM and the LEM is separated and abandoned in lunar orbit (29).

Injection into transearth trajectory is accomplished by the SM propulsion system (30). The timing and flight conditions are precomputed to yield a safe return trajectory, entry, and return landing at the preselected landing site. Return flight time will vary from 60 to 80 hours.

Shortly before reaching earth, the SM is jettisoned and the CM is oriented to the proper re-entry attitude. Following re-entry, the pilot arms a sequence subsystem which automatically jettisons the heat shield, orients the CM using drogue parachutes, and releases pilot parachutes for landing. At landing, the main parachutes are disconnected and recovery aids are automatically initiated.

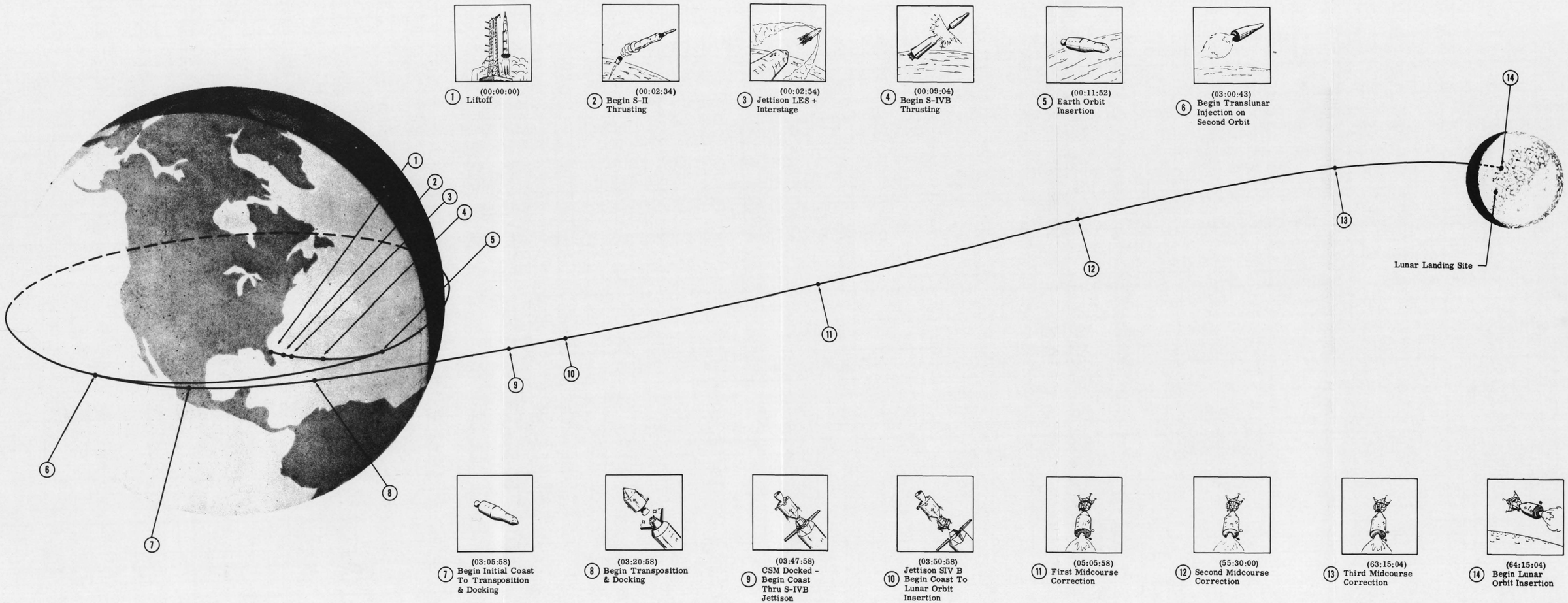

Figure 4-3. Earth Vicinity and Translunar Mission Description (Typical Early Lunar Landing Mission)

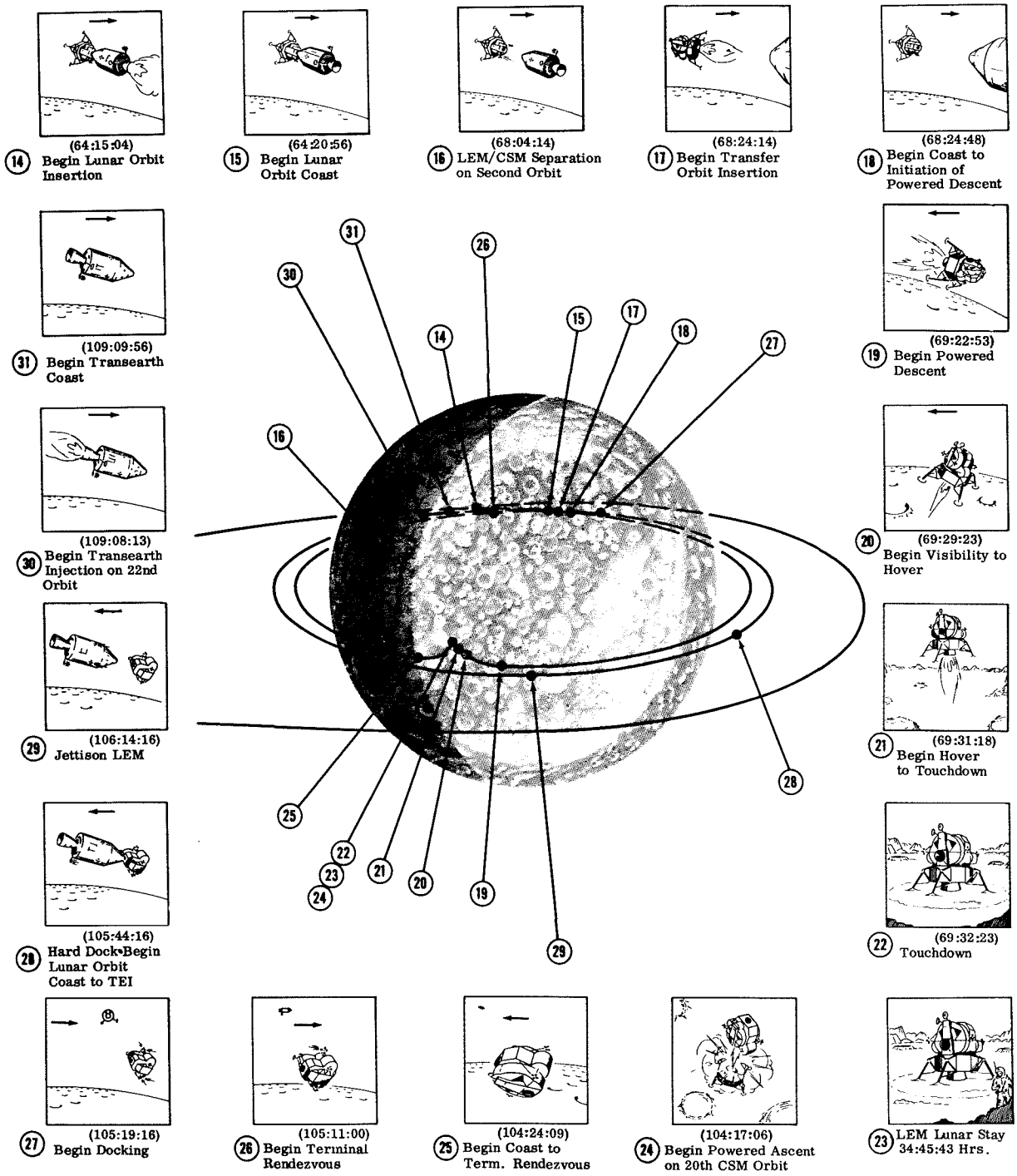

Figure 4-4. Lunar Vicinity Mission Description (Typical Early Lunar Landing Mission)

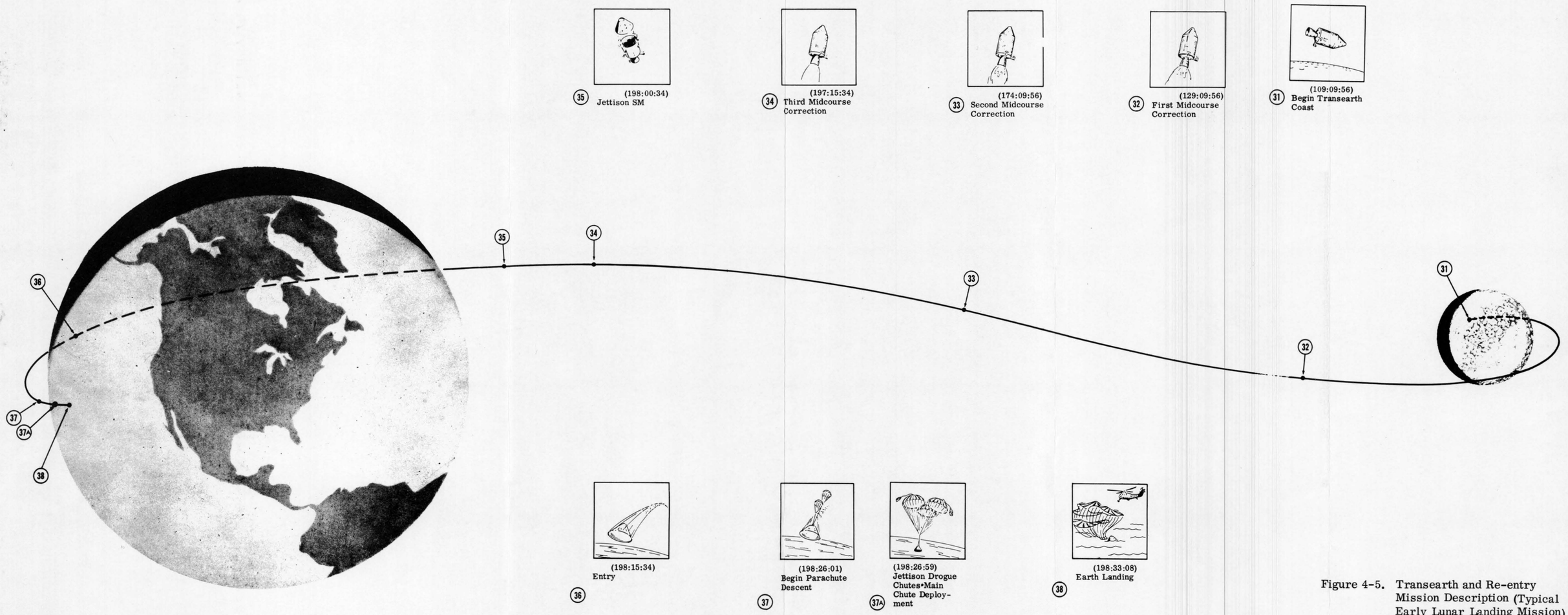

Figure 4-5. Transearth and Re-entry Mission Description (Typical Early Lunar Landing Mission)

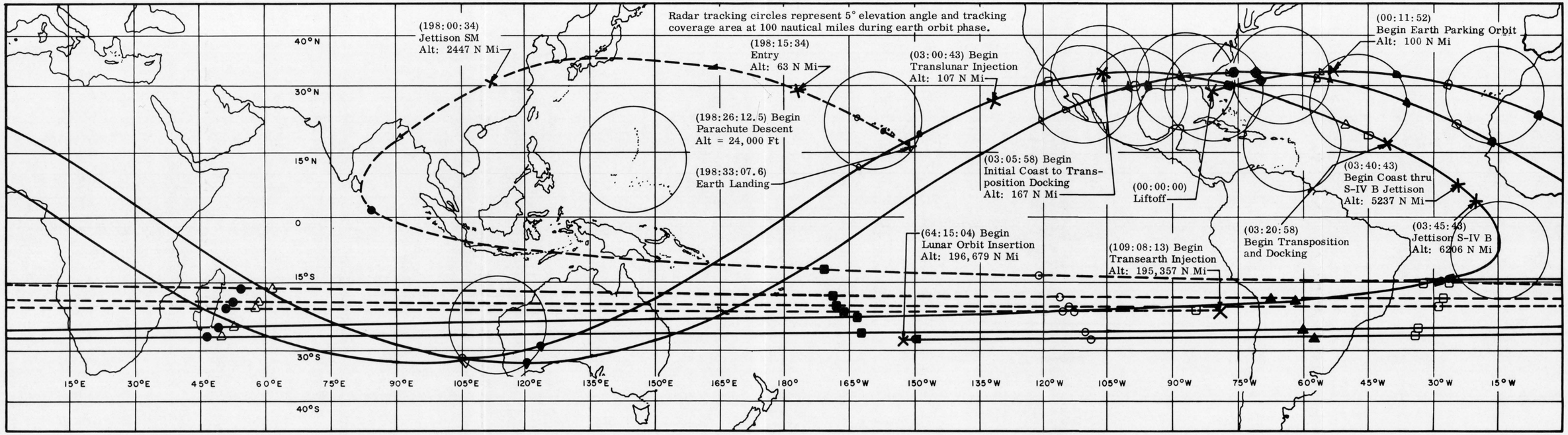

Station with Latitude and Longitude

Antigua	17.15	61.80			
Ascension	-7.95	14.42			
Austin (DSIF)	30.17	-97.68	Corpus Christi	27.66	-97.38
Atlantic Ship	26.00	-47.00	Eglin	30.42	-86.80
Bermuda	32.35	-64.66	Guaymas	27.96	-110.72
Canary	27.74	-15.60	Hawaii	22.13	-159.67
Canberra (DSIF)	-35.31	149.14	White Sands	32.36	-106.37
Cape Kennedy	28.48	-80.58	Madrid (DSIF)	40.40	-3.70
Carnarvon	-24.90	113.72	Guam	13.58	144.93

Unshaded symbols indicate tracking acquisition.
Shaded symbols indicate loss of tracking.
Noted altitudes are measured from earth's surface.

_____ Translunar
_ _ _ _ _ Transearth

Figure 4-6. Typical Earth Track During Apollo Mission

5. SPACECRAFT

5.1 GENERAL DESCRIPTION

The Apollo spacecraft consists of the Command Module (CM), Service Module (SM), and the Lunar Excursion Module (LEM). In Figure 5-1, the spacecraft is shown in its lunar mission configuration minus the launch escape tower. A brief description of each of the above modules is included in this section to provide a better understanding of the spacecraft, its functions, and its usefulness as a vehicle for spaceflight experiments.

Since no two Apollo spacecraft will be identical in configuration, it is extremely difficult to assign specific spaces that will be available for stowage of scientific equipment on every flight. Therefore, experiments will be placed in many locations throughout the spacecraft. When integrating experiments into a particular spacecraft, efforts will be made to secure the optimum location for success of the experiment subject to constraints of primary mission requirements, safety, weight control, difficulty of modifying the spacecraft, etc.

5.2 COMMAND MODULE

5.2.1 General Description

The Command Module will house the crew during all phases of the mission except when the LEM is being used actively during the mission. The CM, shown in Figure 5-2, will contain crew support systems, displays, control equipment requiring direct access by the crew, and all systems needed for earth entry and landing.

The CM is divided into three basic compartments: (1) the crew compartment, (2) the forward compartment, and (3) the aft compartment.

The crew compartment, which comprises the major portion of the CM, is approximately 365 cubic feet in volume. About 220 cubic feet of this space is available for the crew. This compartment is an oxygen pressurized (5 psia), three-man cabin that maintains a habitable environment for the crew during space flights of up to 14 days duration. The crew compartment contains spacecraft controls and displays, observation windows, food, water, sanitation, and survival equipment.

The forward compartment is located at the apex of the conical shaped crew module. This compartment is unpressurized, and the center portion is occupied by the egress tube to permit the crew to debark from the spacecraft during flight. The major portion of the remaining area is occupied by the earth-landing system.

The aft compartment is an area located around the lower rim of the conic body. This area also is unpressurized and not accessible to the crew. It contains the reaction control motors, impact attenuation equipment, instrumentation, and consumable stowage.

Provisions are being made in the CM to incorporate an Experimentation Air Lock for the purpose of exposing certain experiments to the space environment outside the mold line of the CM and returning them to the oxygen pressurized crew compartment without venting the crew area. The exposing of experiments to the space environment and returning them to the crew area will be controlled mechanically by a crew member.

The Experimentation Air Lock will be incorporated into the access hatch and will consist of three major assemblies: (1) the outer experiment door in the heat shield structure, (2) the

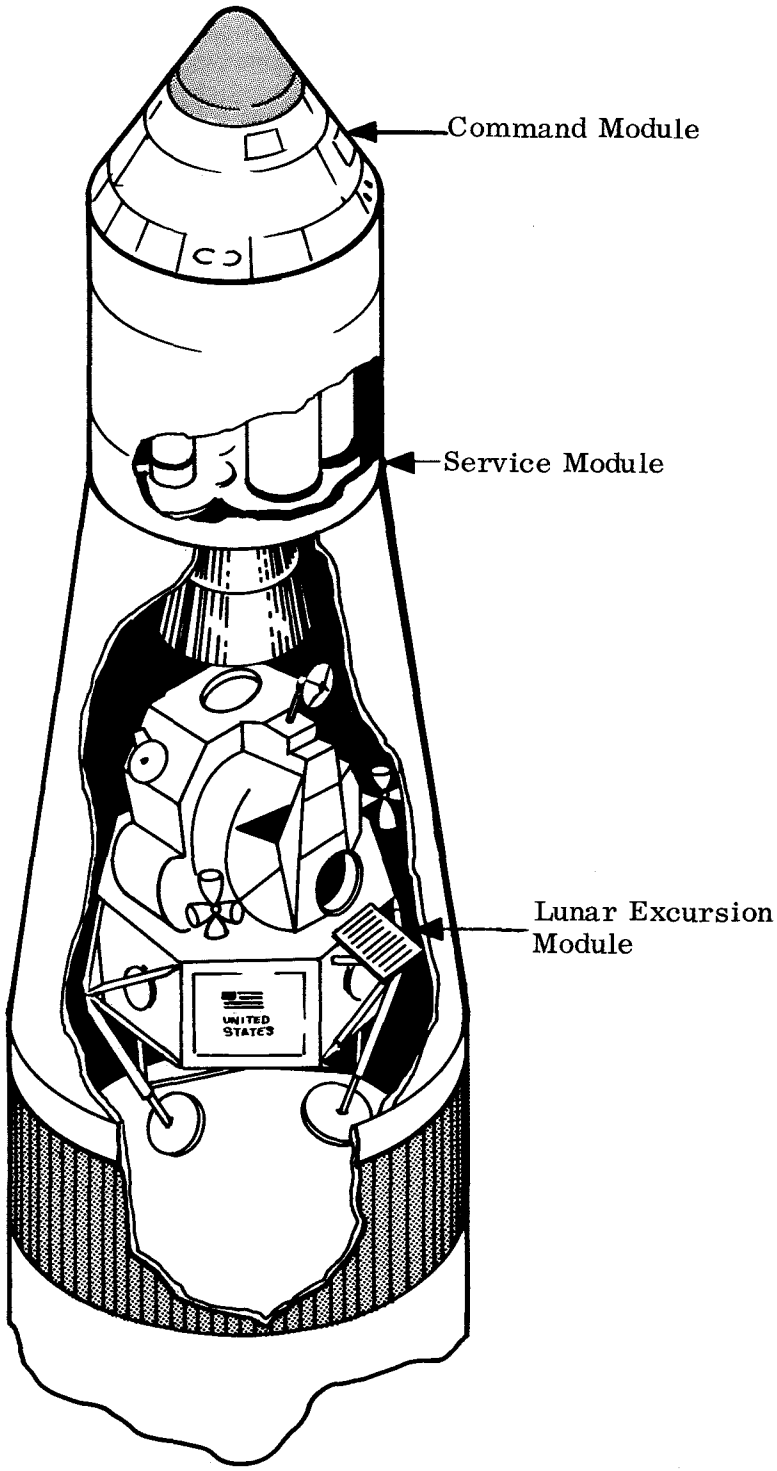

Figure 5-1. Spacecraft, Lunar Mission Configuration

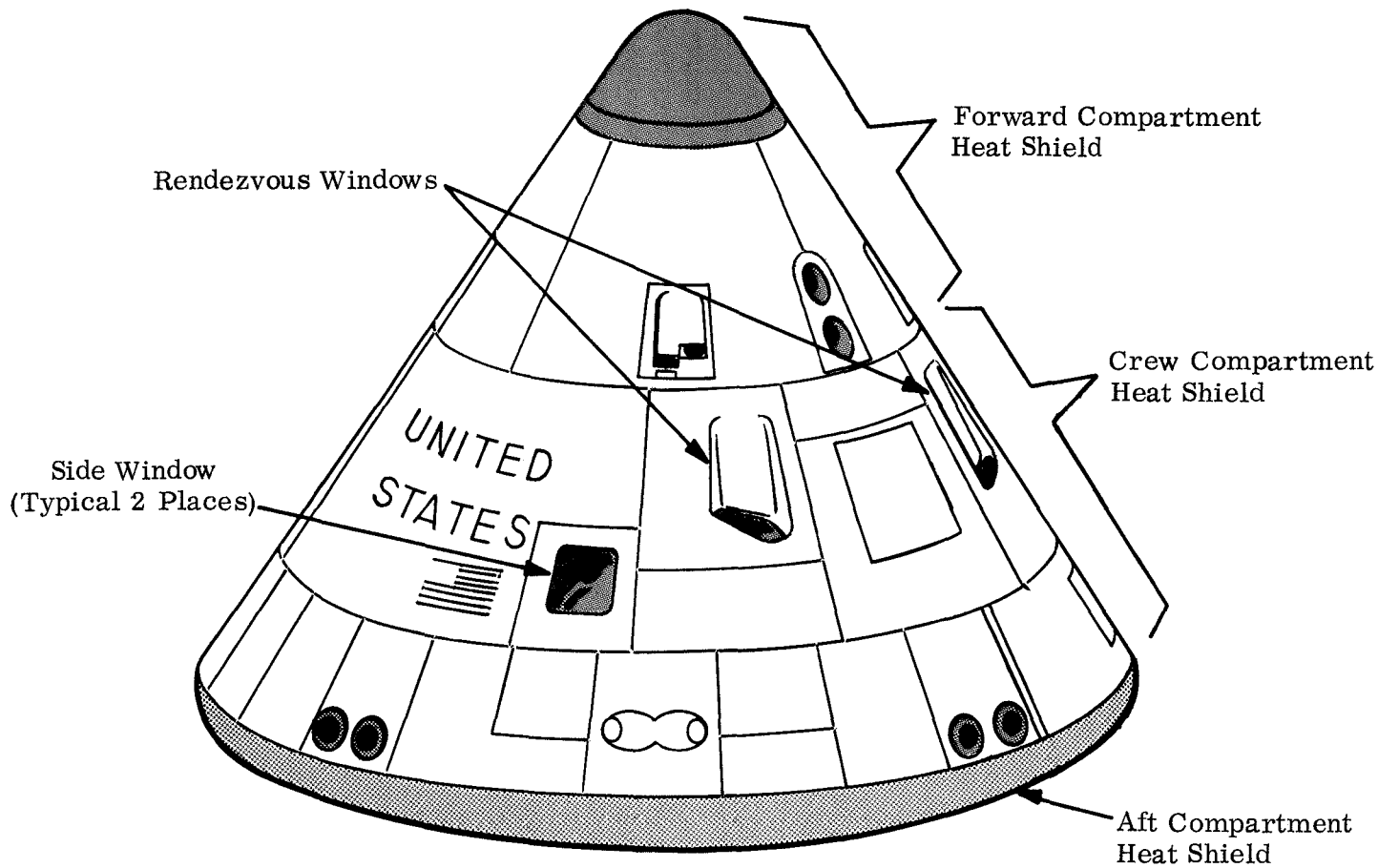

Figure 5-2. Command Module

airlock chamber and outer gate, and (3) the experiment canister. The canister, with the experiment inside, will be removable from the chamber during the boost and re-entry phases to allow the center couch astronaut to view the main instrument panel.

When the Experimentation Air Lock is not in use (experiment canister removed) a cover closes off the chamber and provides a redundant pressure barrier. A three-position vent valve forms an integral part of the chamber and allows venting of the chamber to space prior to opening the outer gate or venting of the chamber to crew compartment pressure prior to removal of the canister, exchange of experiments, or removal of the cover.

The CM has five windows: a general observation window in the entrance hatch, two forward-looking rendezvous windows, and two side-observation windows for horizon and earth-landing reference. The CM windows and the spectral characteristics of the window coating materials are described in paragraph 7.2.6 of this Guide.

5.2.2 Experiment Locations in the Command Module

The CM compartment for experiment equipment stowage is shown in Figure 5-3. Space in the CM readily accessible to the crew is considered as premium space. Approximately 2.7 cubic feet of such premium space has been reserved for stowage of scientific equipment. Only experiments requiring the attention of the crew should utilize this premium space.

The following space in the CM may be considered for stowage of experiment equipment for specific missions on a negotiated basis:

1. The space reserved for lithium hydroxide cartridges which are not used for specific flights.

2. Space occupied by Portable Life Support System (PLSS) on missions not requiring one or more PLSS's.

3. Other locations, subject to negotiation.

In addition to the premium space and the special space available on certain flights, additional experimentation space must be allocated for canister stowage with the incorporation of the Experimentation Air Lock (Figure 5-4). The canister size will be approximately 12 inches in length and 6 inches in diameter.

5.3 SERVICE MODULE

5.3.1 General Description

The Service Module is an unmanned, unpressurized vehicle which contains stores and systems which do not require direct crew accessibility. This module contains the propulsion utilized for midcourse correction and for insertion into and from lunar orbit, fuel cells which provide spacecraft power, radiators for spacecraft cooling, and oxygen and hydrogen supplies. Any experimental equipment stored in this vehicle would be exposed to the surrounding space environment and would be available to the crew only by Extra Vehicular Activity (EVA). EVA capability is not currently planned for the early Apollo-Saturn missions. The SM remains attached to the CM throughout the entire space flight; however, it is separated from the CM just prior to earth re-entry and is not recovered.

5.3.2 Experiment Locations in the Service Module

The Service Module experiments will be housed in self-contained experiment equipment pallets as shown in Figure 5-5. The SM is divided into six preshaped segments (Sectors I through VI) and a central tunnel. Section I is a 50-degree segment that has been allocated for

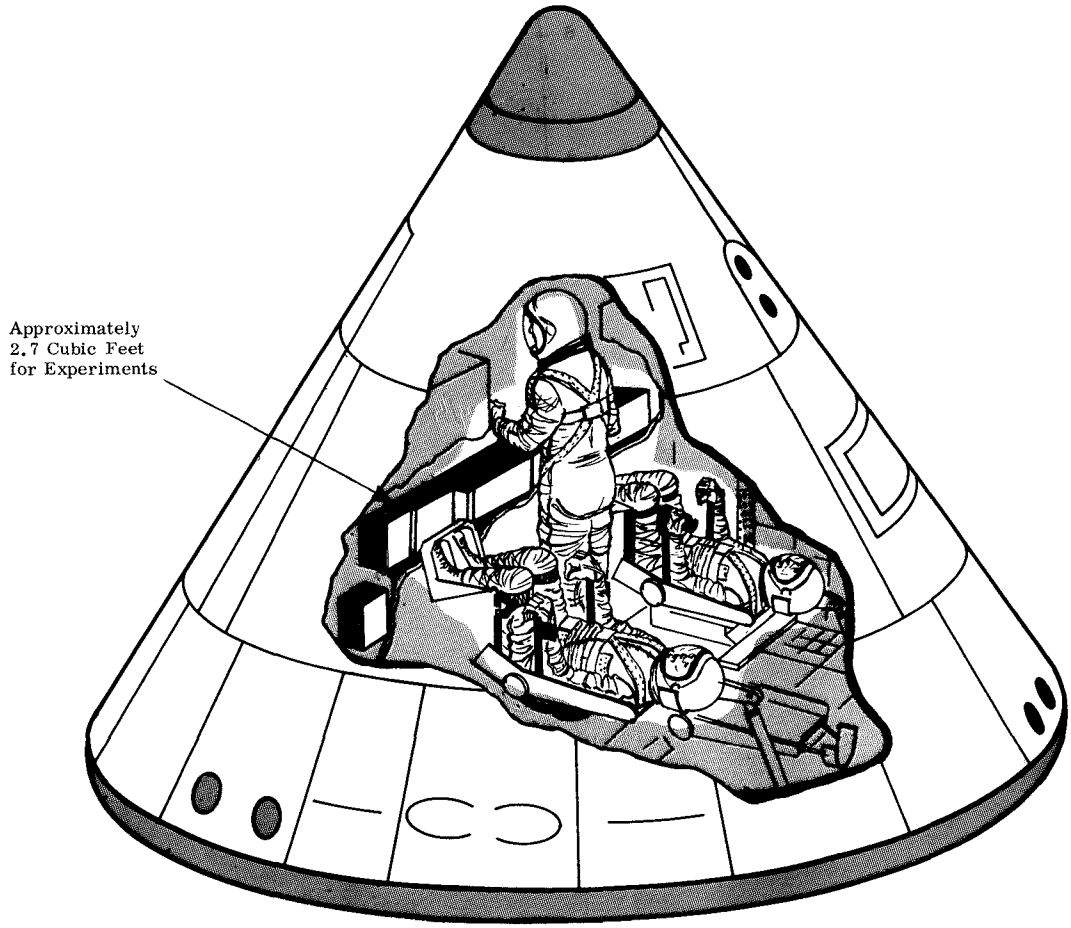

Figure 5-3. Command Module, Experiment Equipment Stowage

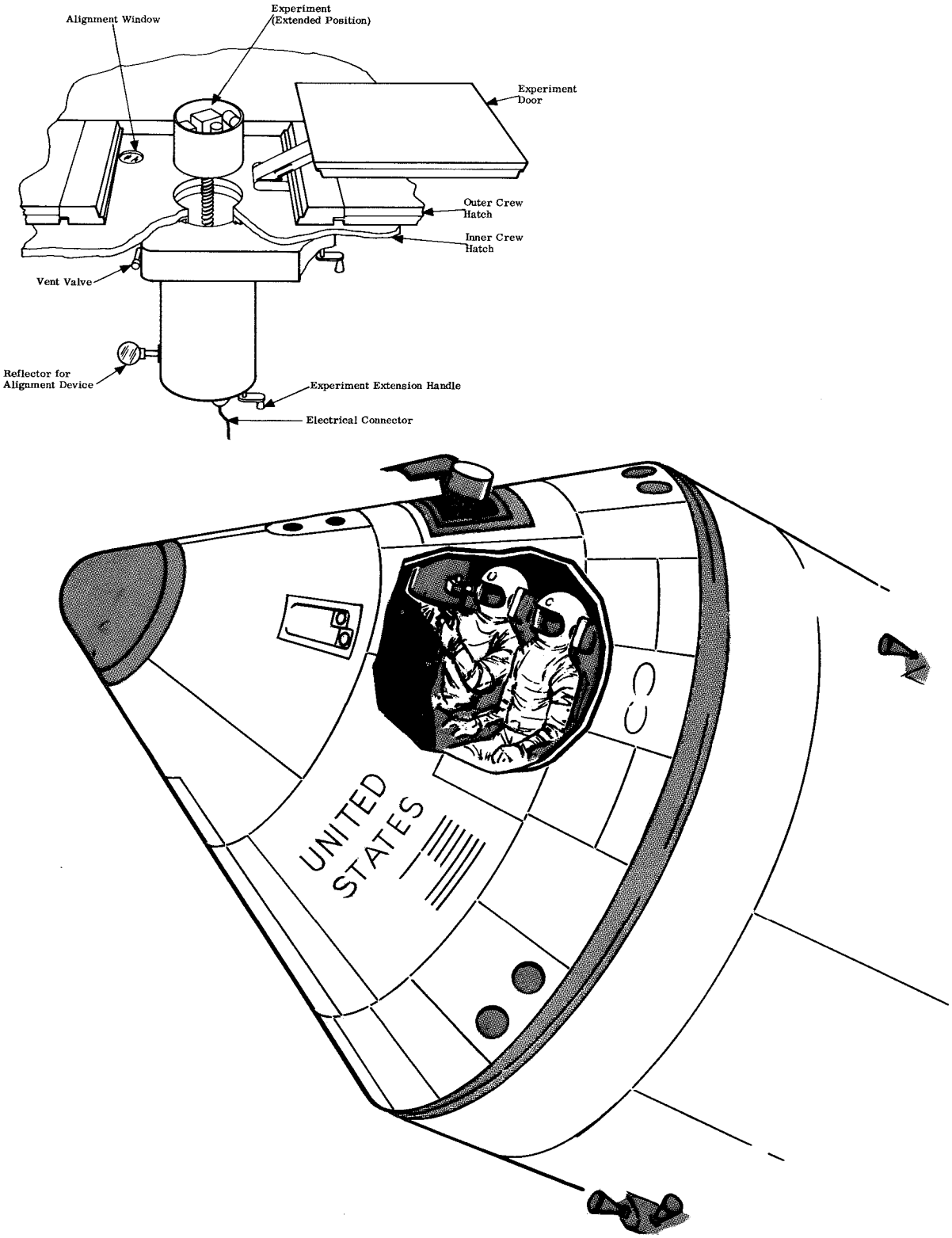

Figure 5-4. Command Module, Air Lock Experiment Configuration

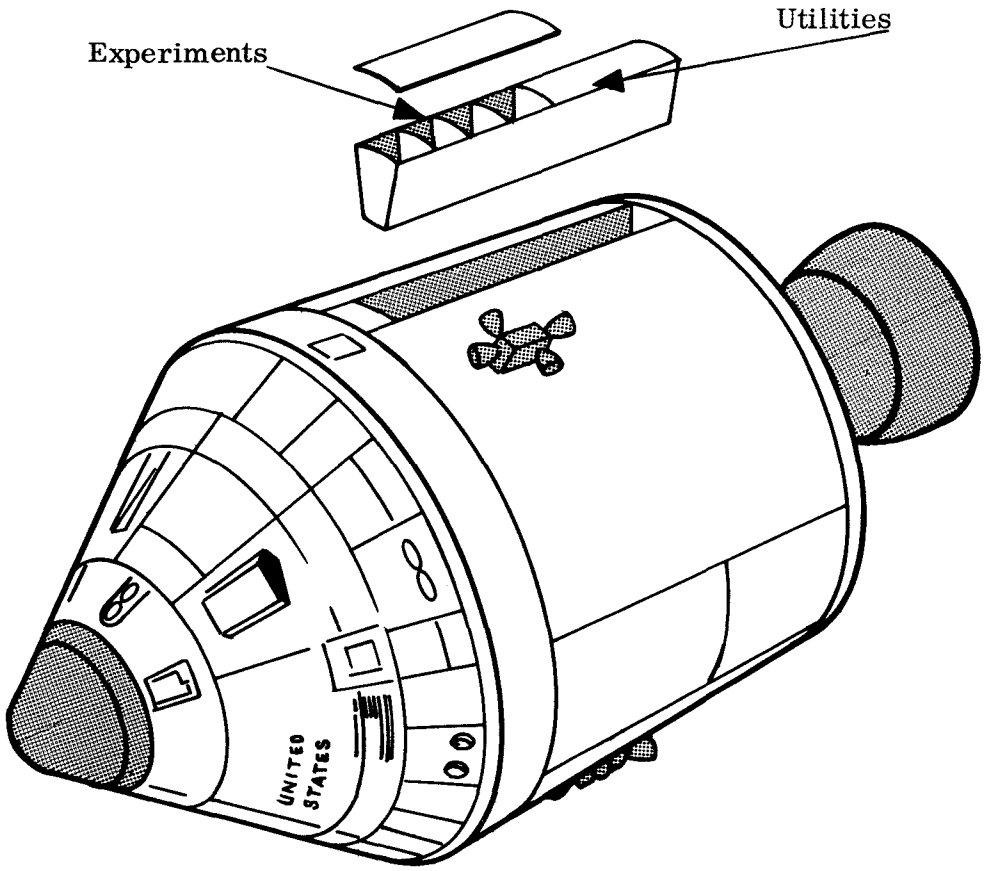

Figure 5-5. Command/Service Module, Experiment Pallet and Location

experimental payloads. A pallet will be designed to fit into this sector for the purpose of accommodating a variety of experimental packages. The pallet will be equipped with five removable shelves spaced at 20-inch intervals, each capable of carrying 800 pounds of experimental equipment. To accommodate very large experiments, the bottom shelf is designed to support a single 4000-pound experiment with the upper four shelves removed. In orbit, the outside cover for the pallet would be jettisoned to expose the experiments.

In addition to the above experimental payload space, the pallet will carry its own utilities section composed of cooling, power, communications, and data transmission subsystems. This compartment will be provided with a non-jettisonable cover so that the utilities subsystem equipment is not exposed to the space environment. A separate stabilization and control system (SCS) for the pallet is not provided since the Apollo SCS appears to be adequate for the vast majority of experiments that would be installed in the pallet area.

There is also limited space available for experimental payloads around the spherical and cylindrical tanks located within the Service Module.

5.4 LUNAR EXCURSION MODULE

5.4.1 General Description

The Lunar Excursion Module is designed to carry two men and required equipment from lunar orbit to the lunar surface, to provide support for the astronauts while on the lunar surface, and to return the men and lunar samples to the CSM in lunar orbit.

The LEM consists of two stages: (1) the descent stage which provides the braking-and-hover capability needed for lunar landing, and (2) the ascent stage for return to lunar orbit. The unmanned descent stage is used to transport experiment equipment to the lunar surface and is accessible to the crew only during the extra vehicular operations.

The ascent stage houses the two crewmen during lunar operations. It provides a pressurized oxygen environment, food, water, communications equipment, and environmental control for the crew for a period of up to 45 hours. The ascent stage has the necessary propulsion and guidance to return the crew from the lunar surface to lunar orbit and rendezvous with the Command and Service Modules.

5.4.2 Experiment Locations in the Lunar Excursion Module

The Lunar Excursion Module, shown in Figure 5-6, will have a total of approximately 17 cubic feet of stowage space enroute to the moon. However, approximately 15 cubic feet of the above are in the descent stage to be left on the moon. On those early development missions which use a LEM, the 15 cubic foot experiment stowage space in the descent stage could be used for in-flight experiments through extra-vehicular activity. Approximately 2 cubic feet of space is available in the ascent stage of the LEM for samples, film, data recording tapes, cameras, accessories, etc. The samples and equipment in the ascent stage will be transferred to the CM and eventually returned to earth.

The maximum payload that can be lifted from the lunar surface in the ascent stage of the LEM is 80 pounds. The weight of the two loaded lunar sample return containers will depend on unknown lunar soil density. The astronaut will weigh the sample return container, films, and tapes prior to leaving the lunar surface; if the weight of these items is less than 80 pounds, cameras may be taken for use on the return trip.

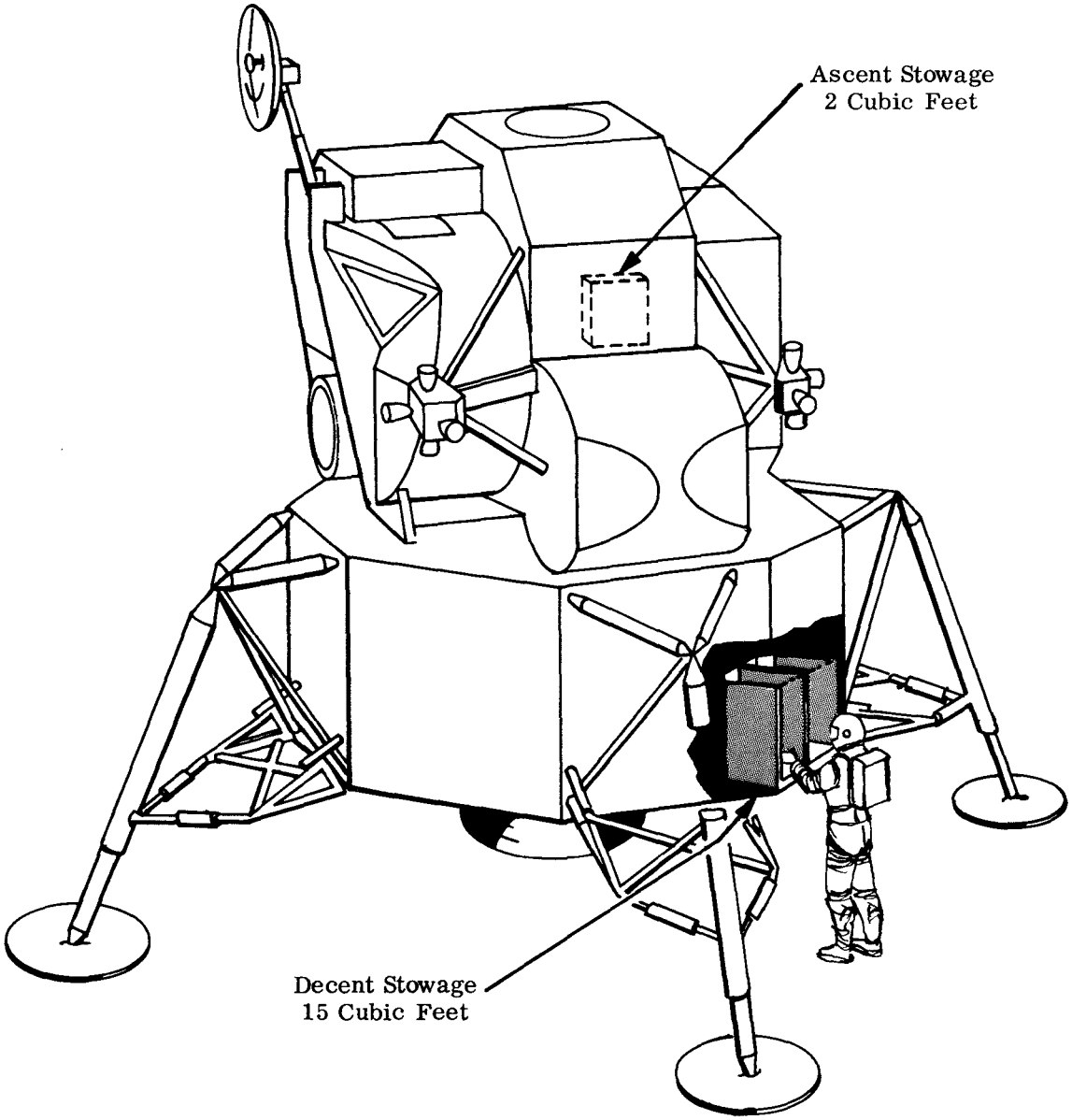

Figure 5-6. Lunar Excursion Module, Experiment Equipment Stowage

6. SATURN LAUNCH VEHICLES

6.1 SATURN IB VEHICLE

6.1.1 General Description

The Saturn IB launch vehicle, Figure 4-1, which is utilized in the Apollo-Saturn 200 series missions, will be capable of placing a payload of approximately 35,500 pounds into a 105-nautical mile earth orbit. The vehicle will be used for several experimental unmanned flights of the Apollo spacecraft, as well as manned earth-orbit flights.

The S-IB stage is powered by eight H-1 engines, burning liquid oxygen and RP-1 fuel, to provide a nominal sea level thrust of 1.6 million pounds. The stage contains its own instrumentation and safety systems, but it will receive guidance and control commands from the Instrument Unit.

The S-IVB stage is powered by a single J-2 engine, having a thrust of 200,000 pounds in vacuum, burning liquid oxygen and liquid hydrogen. The stage contains its own instrumentation and safety systems, but it will receive guidance and control commands from the Instrument Unit.

The Instrument Unit (IU) is a nonpropulsive stage and is a three segment, cylindrical, unpressurized structure, which houses the instrumentation concerned with vehicle performance from liftoff to insertion of the S-IVB/IU and spacecraft into earth orbit.

6.1.2 Saturn IB Experiment Locations

Inflight experimental capability for the Apollo-Saturn 200 series missions will vary depending upon the mission objectives, the engineering and development instrumentation required, and the volume and weight capability available for the mission.

Each Apollo flight with an earth orbit mission places the S-IVB stage and the Instrument Unit in a decay orbit. Although these structures are destroyed during re-entry, eliminating the possibility of recovery, they are attractive vehicles for the carriage of certain types of experiments. The component temperatures listed in Figure 6-1 are the temperatures maintained by ground equipment prior to launch. The temperature change during the short interval of powered flight is accompanied by rapid pressure reduction essentially corresponding to free stream pressure thereby eliminating convective heat transfer influences during the boost flight. The S-IVB and Instrument Unit will be subjected to an orbital environment for up to 4 1/2 hours. Therefore, the anticipated heat flux values for two types of orbit are presented in lieu of compartment temperatures.

The following paragraphs define possible experiment locations in the various zones of the Saturn IB as identified in Figure 6-1.

Zones 2 and 3: S-IB Tail Area

The S-IB tail area is aft of the nine (LOX and fuel) propellant tanks and forward of the eight H-1 engines.

The available (experimental) volume is located above and adjacent to the thrust structure.

Propellant lines and considerable associated plumbing as well as control, electronics, and instrumentation occupy this area. The powered flight time of this stage is less than three minutes at which time it is separated from the S-IVB stage and returns to earth via a ballistic path with no attempt at recovery.

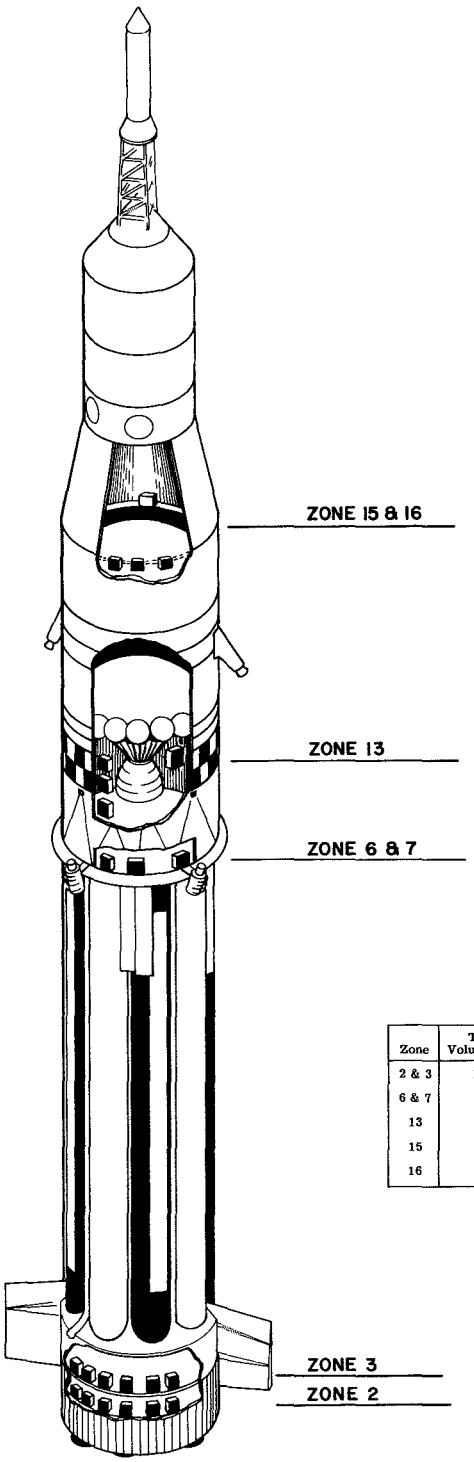

Zone	Total Volume (ft^3)	Largest Sing Volume (ft^3)	Temp Range °F	Maximum Acceleration	Maximum Altitude	Ballistic	Orbital
2 & 3	1193	72	-80°F to 0°F	35.29 m/s^2	35.5 NM	X	
6 & 7	52	3	80°F	35.29 m/s^2	35.5 NM	X	
13	873	348	0°F to 100°F	31 m/s^2	105 NM		X
15	50	10	0°F to 70°F	31 m/s^2	105 NM		X
16	15	15	70°F ± 10°	31 m/s^2	105 NM		X

Figure 6-1. Saturn IB Launch Vehicle, Experiment Locations

Zones 6 and 7: S-IB Forward Interstage Area

The S-IB forward interstage joins the S-IB to the S-IVB stage. The available (experimental) volume is located above the propellant tanks and under the seal plate.

Access to this area is gained through an access door just below the spider beam. Housed in this area is the instrument compartment, fuel pressurization manifold, associated propellant hardware, LOX vent, and some electronics. This section is environmentally controlled prior to launch, but is vented externally. This compartment is exposed following separation and during the ballistic return to earth with no recovery planned.

Zone 13: S-IVB Aft Compartment

The S-IVB aft compartment is continuous with the S-IB forward compartment prior to separation. The available (experimental) volume is within the aft interstage transition structure at approximately the level of the thrust structure forward of the engine gimbal plane. Helium bottles and retrorockets mount in this same general area. LOX and LH_2 lines are mounted in the area along with the J-2 engine mounting structure and controls. Until separation of S-IB and S-IVB, the compartment is closed but vented. S-IB/S-IVB separation occurs with the S-IVB aft interstage remaining attached to the S-IB stage. The J-2 engine of the S-IVB stage ignites with approximately 10 feet of clearance between the engine and separating S-IB stage. Therefore, some flame impingement will occur.

Zone 15: S-IVB Forward Skirt

The available volume for experiments in the forward section of S-IVB is in an environmentally controlled area. However, if a volume in proximity to the LH_2 tank or LH_2 vent is used, the temperatures could approach cryogenic. The S-IVB forward skirt connects the body of the S-IVB stage to the IU. Since the electronic gear in the IU generates heat and the LH_2 tank is at cryogenic temperature, the temperature gradient between them is very steep. The IU/S-IVB interface forms one compartment, but the available empty volumes (Zones 15 and 16) are distinct from each other, one in the IU and the other entirely contained within the S-IVB skirt. Environmental conditions, including heat and vibration which may be set up in the later part of flight, depend upon the mission of the individual flight. The section of the IU more fully describes this.

Zone 16: Instrument Unit

The center section of the Instrument Unit is occupied by the LEM (when the LEM is carried as part of the payload) extending down from above and the forward bulkhead of the S-IVB propellant tank (LH_2) protrudes up from below. Various electronic black boxes mounted on cold plates are fastened to the outer wall. The cold plates maintain the electronic components at prescribed operating temperature during flight.

Also mounted in this same general area are guidance and other instrumentation components. The forward section of the IU is the most remote from the LH_2 tank and is therefore in the highest temperature region, grading off from there to a low temperature adjacent to the tank skin. The S-IVB and Instrument Unit can support the payload in earth orbit for a period of up to 4 1/2 hours. On earth orbit rendezvous missions, the S-IVB forward interstage and Instrument Unit compartments will become exposed during payload adapter separation.

6.2 SATURN V VEHICLE

6.2.1 General Description

The primary mission of the Saturn V launch vehicle, Figure 4-1, is to inject the Apollo spacecraft into an earth-moon trajectory for manned lunar landings. This vehicle is utilized on all Apollo-Saturn 500 series missions. The S-IC first stage will propel the launch vehicle to an altitude of approximately 33.3 nautical miles and attain a velocity of approximately 8100 feet per second. The S-II second stage will propel the launch vehicle from an altitude of approximately 33.3 nautical miles to an approximate altitude of 100 nautical miles and attain a velocity of approximately 19,800 feet per second. The S-IVB third stage and the Instrument Unit used on the Saturn V launch vehicle are essentially the same as those defined for use on the Saturn IB launch vehicle. On the Saturn V launch vehicle, the S-IVB will propel the launch vehicle into a circular 105-nautical mile parking orbit about the earth. Second burn of the S-IVB will inject the payload into translunar orbit. Following second burn, the S-IVB and IU combination will be separated from the payload at an altitude of approximately 6000 nautical miles.

6.2.2 Saturn V Experiment Locations

Inflight experimental capability for the Apollo-Saturn 500 series missions will vary depending upon the mission objectives, the engineering and development instrumentation required, and the volume and weight capability available for the mission. The compartment temperatures listed in Figure 6-2 are the temperatures maintained by ground equipment prior to launch. The temperature change during the short interval of powered flight is accompanied by rapid pressure reduction essentially corresponding to free stream pressure thereby eliminating convective heat transfer influences during the boost flight.

The following paragraphs define possible experiment equipment locations in the various zones of the Saturn V as identified in Figure 6-2.

Zone 2: S-IC Tail Area

The largest volume for experimental use in the base area is adjacent to the center engine beam forward of the base heat shield. Other smaller usable volumes are located around the periphery of the tail area between the heat shield and the rear fuel tank bulkhead. The engines and their controlling gimbal mechanism are aft of the heat shield, but support structure, thrust structure, plumbing (LOX and fuel), instrumentation, etc., are all in the same general area between the fuel tank and the heat shield. This is an environmentally controlled area during prelaunch, but is vented to the atmosphere. After the powered flight time of about 2 1/2 minutes, the S-IC stage follows a ballistic trajectory which terminates in destruction by re-entry.

Zone 5: S-IC Intertank

Instrumentation in this zone will be mounted on the inside wall of the intertank structure. The available open volume in the intertank compartment exclusive of instrumentation is that volume bounded by the forward bulkhead of the fuel tank, the aft bulkhead of the LOX tank, and the intertank structure.

The major vehicle components located in this compartment are five LOX suction lines, the fuel tank pressure lines, LOX fill and drain lines, and the fuel tank pressure vent line. An access door is provided in the intertank structure. This is the only compartment on the vehicle which has no provisions for prelaunch environmental control, but it is vented to the atmosphere.

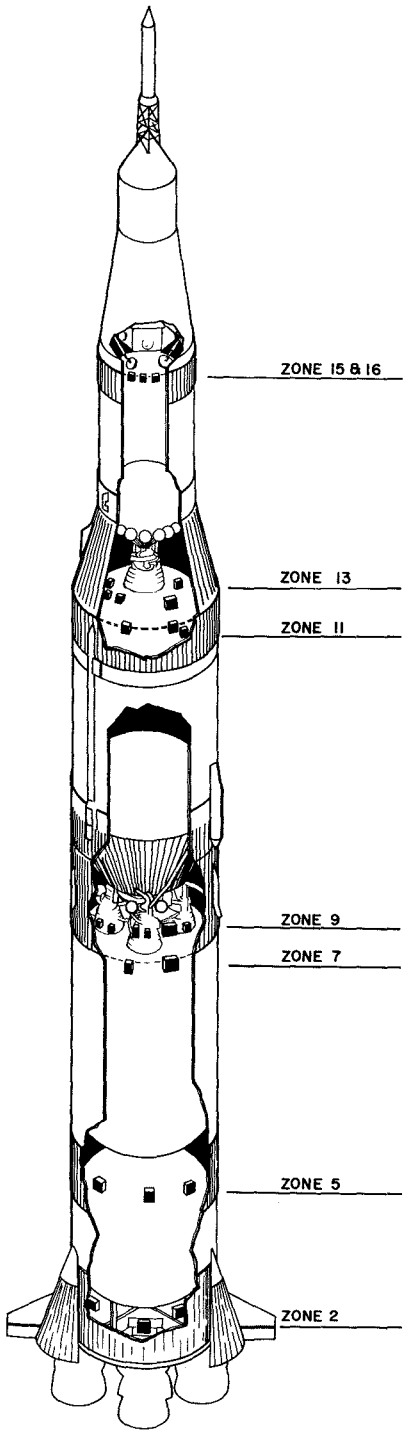

Zone	Total Volume (ft^3)	Largest Sing Volume (ft^3)	Temp Range °F	Maximum Acceleration	Maximum Altitude	Ballistic	Orbital
2	1089	355	80°F ± 10°	46.3 m/s²	33.3 NM	X	
5	527	358	-80° F to -120°F	46.3 m/s²	33.3 NM	X	
7	164	111	0°F to -185°F	46.3 m/s²	33.3 NM	X	
9	835	198	-50°F to +60°F	7.4 m/s²	45 NM	X	
11	199	103	0°F to -185°F	21.5 m/s²	100 NM	X	
13	1230	214	110°F Min 0°F	6.99 m/s², 15.24 m/s²	155 NM		X
15	124	10	0°F to 70°F	6.99 m/s², 15.24 m/s²	155 NM (5237 NM)	Translunar	X
16	15	15	70°F ± 10°F	6.99 m/s², 15.24 m/s²	155 NM (5237 NM)	Translunar	

Figure 6-2. Saturn V Launch Vehicle, Experiment Locations

Zone 7: S-IC Forward Skirt

Instrumentation in this zone will be mounted along the inside periphery of the S-IC forward skirt. The available open volume (neglecting that occupied by instrumentation) will be bounded by the forward skirt and the LOX tank forward bulkhead.

The major vehicle components in this region are the S-IC LOX tank forward bulkhead, the LOX tank pressurization line, and the LOX tank vent line.

This is an environmentally controlled area during prelaunch, but it is vented to the atmosphere. Since the S-IC stage separates from the upper stages after its powered flight, experiments mounted in Zone 7 will be completely exposed during the unpowered ballistic flight.

Zone 9: Aft Interstage

Instrumentation in this zone will be mounted along the inside periphery of the S-II aft interstage structure. The total open volume (neglecting that occupied by instrumentation) is that which is bounded by the inside of the interstage structure, outside of the thrust structure, outside of the J-2 engine cluster, and the separation planes.

The major vehicle components in Zone 9 are the J-2 engine cluster consisting of five engines, engine controls consisting of two actuators per engine, five LH_2 feed lines to engines, five LOX feed lines to engines, and the heat shield. A door in the interstage structure provides access into the interstage compartment.

The S-II aft interstage separates and is jettisoned approximately 30 seconds after S-IC/S-II separation. This delay is provided to permit the transient motions associated with S-IC/S-II separation to damp out. Total powered flight time for the S-II interstage is therefore about 177 seconds. During separation the S-II aft interstage is subjected to flame impingement. Following separation, the interstage reenters on a ballistic trajectory.

Zone 11: S-II Forward Skirt

The S-II forward skirt connects to the S-IVB aft skirt forming a continuous compartment until S-IVB separation. The volumes available for experiments in Zone 11 are in close proximity to the LH_2 tank and therefore subject to extreme cold. This area also contains LH_2 vent lines, tank probe connections, and other hardware. This compartment is environmentally controlled during prelaunch but vented externally until the time just prior to S-IVB firing when separation takes place.

Zone 13: S-IVB Aft Compartment

S-IVB aft compartment is continuous with the S-II forward compartment. The available (experimental) volume is within the aft interstage transition structure at approximately the level of the thrust structure forward of the engine gimbal plane. Helium bottles and retrorockets mount in this same general area. LOX and LH_2 lines are mounted in the center of this area along with J-2 engine mounting structure and controls. Until separation of S-II and S-IVB, the compartment is closed but vented; after separation, the compartment is open to space. The S-IVB aft interstage remains attached to the expended S-II stage and the complete assembly follows a ballistic trajectory to re-entry.

Zone 15: S-IVB Forward Skirt

The available volume for experiments in the forward section of

S-IVB is environmentally controlled during prelaunch. However, if a volume in proximity to the LH_2 tank or LH_2 vent line is used, the temperatures could approach cryogenic. The S-IVB forward skirt connects the body of the S-IVB to the Instrument Unit. Since the electronic gear in the Instrument Unit generates heat, the temperature gradient from the forward Instrument Unit to the top of the LH_2 tank will be steep. The IU/S-IVB interface forms one compartment, but the available empty volumes (Zones 15 and 16) are distinct from each other, one being in the forward portion of the Instrument Unit and the other entirely contained within the S-IVB forward skirt. When the docking maneuver has been completed (see section on IU), the S-IVB/IU assembly will be separated from the payload portion of the vehicle, thus exposing the S-IVB and IU to space environment.

Zone 16: Instrument Unit

The center section of the IU is occupied by the LEM landing gear extending down from above and by the forward bulkhead of the S-IVB propellant tank (LH_2) protruding up from below. The various electronic modules are mounted on the cold plates which in turn fasten to the outer wall. The cold plates absorb heat generated by electronic gear during flight (primarily during parking orbit). Also mounted in this area are guidance and other instrumentation components. The forward section of the IU is the most remote from the LH_2 tank and is therefore in the highest temperature region, grading off from there to a low temperature adjacent to the LH_2 tank skin. After the docking maneuver in space, when S-IVB has been shut down for the second time, the payload is separated from the IU which exposes the IU compartment.

7. SPACE VEHICLE AND EXPERIMENT EQUIPMENT TECHNICAL CONSIDERATIONS

7.1 GENERAL

The electrical subsystem, communications and data transmission subsystem, and other functional subsystems of the Saturn launch vehicle and the Apollo spacecraft provide additional capabilities for support of experiments. To maximize the utilization of such subsystem capabilities, the experimenter should become familiar with such functional subsystems and the design considerations that affect optimum utilization of the capabilities provided by the subsystems. This section will introduce potential experimenters to some of the subsystem capabilities, design considerations, and environmental factors affecting the design of experimental equipment.

7.2 SPACE VEHICLE SUBSYSTEMS CAPABILITIES

The launch vehicle and spacecraft subsystem capabilities for providing electric power, data transmission links, and other functional support for accommodating Apollo experiments will be discussed only briefly in the following paragraphs. The cognizant technical monitor will make available the interface and specification documentation necessary for determining space vehicle subsystem capabilities.

7.2.1 Electric Power and Energy

Electric power for the various propulsion stages and the Instrument Unit of the launch vehicle is supplied by batteries rated at 28 volts dc. Since these batteries will not be recharged in flight, a gradual decrease in output voltage can be expected as the flight progresses. Normally, the launch vehicle batteries are sized to suit mission requirements; however, the addition of batteries and cabling, within existing weight and space limitations, will be considered to accommodate specific experiments. Considering battery tolerance and voltage drop, launch vehicle experiment equipment should be designed to operate with nominal steady-state voltage limits of 24 to 30 volts dc.

In the Apollo Command Service Module, under present plans, it is estimated that approximately 10 kilowatt-hours of equivalent dc power will be made available for experiments. It is anticipated that the bulk of electrical power demand for experiments will be at 28 volts dc, which may be obtained from the CSM nonessential dc power bus rated at 27.5 volts dc, plus or minus 2.5 volts dc, steady state. A limited amount of ac power will be available, within the total 10 kilowatt-hour energy limits, for experiments at 115 volts, 400 cycles, three phase. Since the source of electrical power in the CSM will be a fuel cell bank, it is expected that the voltage regulation of this electric power system will be better than that of the launch vehicle stages. Detailed characteristics of the CSM 28 volt dc and 115 volt ac electric power systems will be provided by MSC.

In the Lunar Excursion Module approximately 2400 watt-hours of electrical energy at 28 volts dc will be made available for experiments. The steady-state voltage limits of the LEM electric power system are specified at present as 25.0 to 31.5 volts dc. This is predicated on the use of an all-battery electrical power system. Complete voltage specifications for the LEM electrical power system will be furnished the sponsor of experiments by the technical monitor.

7.2.2 Data Transmission

Data transmission from the various stages of the launch vehicle will be in real time via VHF/FM transmitters in the 225 to 260 megacycle range. Both time-shared commutated channels and continuous channels are provided. The time-shared measurements are sampled by commutators to form time-division multiplexed signals which are used to modulate voltage-controlled subcarrier oscillators. Measurements of analog nature continuously modulate other voltage-controlled subcarrier oscillators. The outputs of all subcarrier oscillators of a given telemetry data link are combined to form a composite signal used to modulate a VHF/FM transmitter. Although the number of data transmission channels provided on the launch vehicle stages is sized on the basis of normal mission requirements, the capability exists for adding data transmission channels to accommodate experiments

Data transmission from the spacecraft modules; that is, from CSM and LEM will be both in real time as well as recorded and stored experimental data, which can be transmitted at a time when the spacecraft is in a more favorable position with respect to ground stations, or which may be brought back to earth for subsequent analysis. For near earth operation, VHF/FM transmitters in the 225 to 260 megacycle range will be used for transmitting data to ground stations. For deep space operation, frequency modulated S-band (approximately 2275 Mc) transmitters will be used to send data to ground stations.

A digital data acquisition system is also provided for checking the various subsystems of the space vehicle during factory through prelaunch testing. In this system the measurements are multiplexed and coded into a digital-coded pulse train (PCM) for telemetering of the data via an FM RF link to the ground checkout equipment. For backup purposes, a direct wire coaxial link is also provided.

Complete details of the data transmission channels and specifications for the data recording equipment available for experiments will be provided to the sponsor of a given experiment by the cognizant technical monitor. Additional data transmission links, if required, will be negotiated.

7.2.3 Umbilical Connections

A number of pins in the umbilical between the Command Module and the Service Module for electrical power and signal connections were allocated for experiments. This will permit monitoring from the Command Module of experiment equipment installed in the Service Module.

If additional umbilical connections are required for the conduct of experiments, such umbilical connections should be determined by the sponsor of a given experiment early in the program and negotiated with NASA in sufficient time to coordinate these requirements with the normal umbilical requirements of the primary mission.

7.2.4 Display and Control

It is desired that the controls and displays for experiment equipment be stored and used within the standard compartments provided for such equipment. Where other locations are desired for effective control, suitable locations will be negotiated for either fixed or temporary attachments. Attention is directed to the fact that present design philosophy does not permit display or control from the Command Module of experiment equipment installed in the propulsion stages or the Instrument Unit. No space has been allocated on the CSM display panels for presentation of

experiment instrumentation data or for control of the experiment equipment.

7.2.5 Thermal Control of Experiment Equipment

Most of the space available for experiments equipment in the propulsion stages of the launch vehicle and in the Service Module is subject to a passive environmental control system in flight. Air or nitrogen gas will be used to cool and purge such areas on the launch pad via umbilical connections, but in flight there will be no flow of gaseous nitrogen in such areas since this flow will be terminated at liftoff. In flight the temperature of the equipment is kept within limits by the container insulation.

Selected areas available for experiment equipment in the Instrument Unit, Command Module, and the Lunar Excursion Module are provided with an active environmental control system for regulating the temperature of the experiment equipment. In such areas, the experiment equipment will be mounted on cold plates, that is, on bases through which a coolant gas such as helium will be circulated in flight to cool the experiment equipment mounted on the cold plates. The availability of cold plates, the cooling capacity, and other thermal design parameters of such cold plates will be defined by the cognizant technical monitor.

7.2.6 Observation Windows

Observation windows are provided in the Lunar Excursion Module and the Command Module. Such windows may be used for experiments. The shape, location, view angles, and general purpose mounting provisions of the windows will be defined by NASA upon request.

The optical transmission characteristics of the LEM windows have not been defined; however, both the material and window coatings for the CM windows are defined as indicated below:

Window No. 1 - Heat Shield Window, Code 7940 Amorphous Fused Silica, Ultraviolet Transmitting Grade.

Window No. 2 - Middle Pane, Code 1723 Aluminosilicate Glass.

Window No. 3 - Inner Pane, Code 1723 Aluminosilicate Glass.

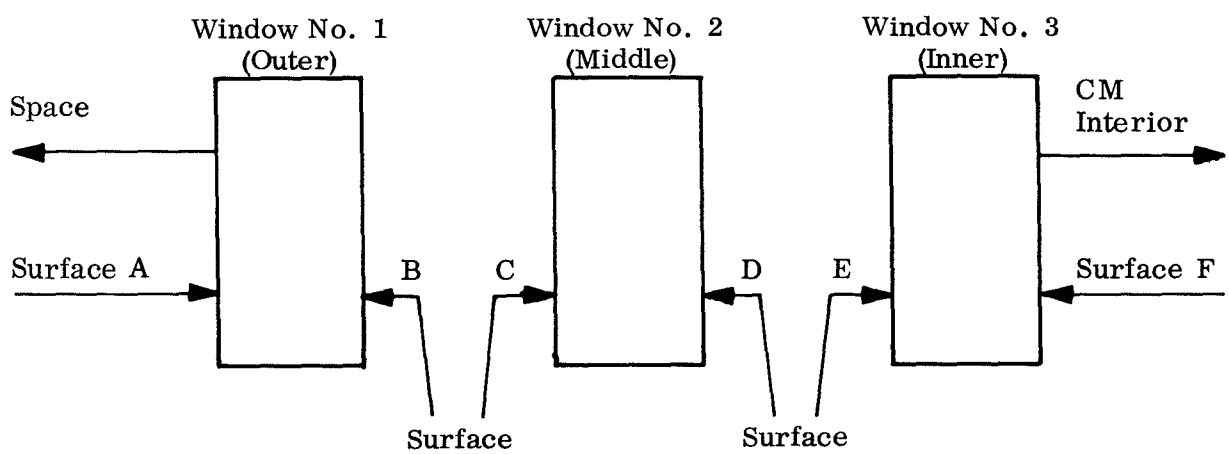

The above windows are coated with thin film, vacuum deposited coatings as indicated below:

Surface A - Single-layer Magnesium Fluoride Anti-Reflectance Coating.

Surface B - Multilayer Blue-Red Reflection Coating.

Surfaces C, D, E, and F - High-Efficiency Reflection-Reducing Coating.

The spectral characteristics of the above coatings are indicated as follows:

1. Single-layer Magnesium Fluoride Anti-Reflectance Coating exhibits a minimum average of 97.5 percent transmission in the 400 to 700 millimicron range.

2. Multilayer Blue-Red Reflection Coating at a 45-degree incidence angle provides less than one percent transmission below 360 millimicrons, less than 10 percent average transmission from 800 to 1200 millimicron range, and an average of 80 percent or greater transmission from 400 to 700 millimicrons.

3. High-Efficiency Reflection-Reducing Coating at a 45-degree incidence angle exhibits no more than one percent average reflection per surface in the region from 400 to 700 millimicrons.

7.3 EQUIPMENT DESIGN CONSIDERATIONS

To assure compatibility with and to facilitate integration of the experiment with the space vehicle configuration, experiment equipment should be designed to the same reliability level as other nonmission-essential equipment of the space vehicle, and should be qualified by appropriate tests to insure that the equipment is compatible with the space vehicle mission requirements. Detailed design criteria, environmental parameters, and qualification testing plans will be defined by the cognizant technical monitor. Some general design considerations and environmental criteria will be given in this section to acquaint potential experimenters with such factors.

7.3.1 Attitude Modes

Experiment equipment installed in the propulsion stages and the Instrument Unit will be subjected to roll, pitch, and yaw motion dictated by mission trajectory requirements. Thus, experiments requiring stabilization or close attitude control will not be installed in the propulsion stages of the launch vehicle. Some consideration has been given to stabilization of the Instrument Unit for experiments after separation from the CSM; however, such requirements, if any, should be negotiated with NASA.

The CSM, on the other hand, is provided with a stabilization and attitude control system that can be utilized for space observations or photographic experiments requiring close attitude control. The attitude-hold deadband about any axis is ±1/2 degree. Within this deadband, the attitude rate in the roll axis using minimum impulse can be as low as 2.4 arc minutes per second for a spacecraft configuration without the LEM and with the Service Module propulsion system tanks empty. For other axes and with a fully loaded spacecraft, the attitude control rates will be lower. Finer attitude control than the above, if specifically required for a given experiment, may be available under certain conditions. Such rates and conditions can be negotiated with NASA.

7.3.2 Environmental Design Considerations

Experiment equipment for Apollo inflight experiments should be designed to operate within specification requirements after exposure to the following environments:

1. Extremes of the natural environments during:

   a. Manufacture and factory testing.

   b. Transportation by land, sea, or air to the launch site.

   c. Assembly, checkout, and storage at the launch site.

2. Induced environments experienced in the nonoperating condition due to shock and vibration during storage and transportation.

3. Induced environment experienced during the various mission phases.

The induced environments experienced by experiment equipment during the various mission phases will depend upon the location of the experiment equipment within the launch vehicle or spacecraft, type of mission, duration or life of the experiment, etc. The factors that should be considered for the above induced environments are the duration, magnitude, and cycling of such environmental considerations as:

1. Temperature.

2. Pressure.

3. Vibration levels and spectral distribution.

4. Acoustical levels and spectral distribution.

5. Acceleration.

6. Shock.

7. Humidity.

8. Variation in composition of the ambient gases.

9. Exposure to corrosive contaminants or explosive ambients.

10. Low pressure solar energy.

11. Nuclear Radiation.

MIL-STD-810A, Environmental Test Methods for Aerospace and Ground Equipment, dated 23 June 1964, may be used as a preliminary guide to the environmental design criteria for the above induced environments to be experienced by experiment equipment in flight. However, more specific information and requirements for such induced environments will be defined by the cognizant NASA Center.

In addition to the above induced environments experienced during the active phases of the mission, all experiment equipment should be able to withstand the natural environment extremes during manufacturing, transportation, storage, and handling. The natural environments to be considered are:

1. Atmospheric pressure during manufacture, transportation, and storage.

2. Ambient temperature.

3. Solar radiation.

4. Humidity.

5. Rain.

6. Salt spray.

7. Sand and dust.

8. Ozone.

9. Fungus.

The applicable range of the above environmental factors will be determined by the location of manufacturing sites, mode of transportation, assembly and storage of the equipment, etc. Specific ranges for the natural environments will be defined by the cognizant technical monitor after approval of an experiment for inclusion on a specific mission.

7.3.3 Selection of Materials

In selecting materials for experiment equipment due consideration should be given to the effects of space flight environments on the stability and integrity of the materials used. To assist the experimenter in the selection of suitable materials, the technical monitors will define such material requirements. Some of the factors to be considered in the selection of materials are:

1. Resistance to corrosion, degradation, or instability when exposed to environments to be encountered during the mission.

2. Electrolytic corrosion due to dissimilar metals in direct contact.

3. Use of magnetic material in proximity to sensitive instrumentation.

4. Resistance to fungus attack.

5. Use of critical or allocated materials.

7.3.4 Electromagnetic Interference

Experiment equipment shall be designed to minimize electromagnetic interference, both conducted and radiated type. The requirements of MIL-I-26600 shall apply, unless otherwise directed by the cognizant technical monitor.

7.3.5 Hazardous Conditions

Experiment equipment which, in either normal or abnormal operation, may cause hazards to the crew, ground personnel, the space vehicle, or facilities will not be permitted. Fail-safe design shall be incorporated in all experiment equipment.

Where radioactive materials are used in experiments, adequate shielding and controls shall be provided to prevent any adverse effects on other equipment or radiation buildup in the spacecraft or LEM.

Electrical devices operating in hazardous areas shall be of explosion-proof construction and be installed in accordance with applicable rules for electrical installations in hazardous areas.

7.3.6 Quality Assurance and Testing Program

It is mandatory that all experiment equipment be designed, constructed and tested to high quality standards to withstand the extreme environment conditions of space flight in the interest of flight safety and to insure successful conduct of the experiment under these conditions. All experiment equipment shall be subjected to the Quality Assurance provisions of NASA Publication NPC 200 and revisions thereof, and to the Reliability requirements of NASA Publication NPC 250 and revisions thereof. Acceptance and qualification

testing of experiment equipment shall be in accordance with MIL-STD-202C, MIL-STD-810A, and other standards and criteria as specified by the cognizant technical monitor. Under certain conditions, some requirements may be waived by NASA and the experimenter will be assisted by the technical monitor.

☆ U.S. GOVERNMENT PRINTING OFFICE : 1965 O—775-668