FINAL REPORT

ESTABLISHMENT AND MAINTENANCE OF A MANNED LUNAR BASE IN THE TIME PERIOD 1970-1975

APPENDIX
TO
VOLUME 1

PRC R-291

21 December 1962

Prepared for
Lockheed Spacecraft Organization of
Lockheed - California Company

PLANNING RESEARCH CORPORATION
LOS ANGELES, CALIFORNIA WASHINGTON, D. C.

FINAL REPORT

ESTABLISHMENT AND MAINTENANCE OF A MANNED LUNAR BASE IN THE TIME PERIOD 1970-1975

APPENDIX TO
VOLUME 1

PRC R-291

21 December 1962

Prepared for

Lockheed Spacecraft Organization of
Lockheed - California Company

By

M. Fishbein, Project Manager

L. A. Baron
I. Bornstein
L. A. Giamboni
C. E. Lusk
D. D. Patton
R. G. Salter
J. J. Schwarz
E. H. Spoehel
L. G. Wimpey

PLANNING RESEARCH CORPORATION
LOS ANGELES, CALIF. WASHINGTON, D. C.

TABLE OF CONTENTS

TABLE OF CONTENTS
(Continued)

LIST OF EXHIBITS

LIST OF EXHIBITS
(Continued)

LIST OF EXHIBITS
(Continued)

APPENDIX A

EARTH-MOON TRANSPORTATION SYSTEMS

1. Phase One: Presupply

The necessity of landing supplies and equipment on the moon prior to any manned landing is quite obvious. It would not be desirable to send men to the lunar surface and then have them wait until supplies arrive; the risk of having to support these men with only that which they can take along with them in their landing vehicle is too great, and quite unnecessary.

There are three classes of launch vehicles that can be used for the presupply phase (see Exhibit A1):

a. Small Saturns (C-1, C-1B, Titan III)

b. Advanced Saturn (C-5)

c. Large vehicles (Liquid Nova)

The smaller Saturns appear unsuited for this task. For one, it would require too many launchings. It takes roughly 16 C-1's or 8 C-1B's or Titan III's to put the same payload on the moon as can be achieved with a single C-5; operational costs are too high. Second, the use of small vehicles would require landing the payload on the moon in smaller increments. Consequently, this would require the base crew to perform a larger amount of assembly at the base than would otherwise be required if larger vehicles were used.

The other extreme involves use of the very large vehicles of the Nova class (see Exhibit A2). The solid C-5 is included in this area, because it is indeed much larger than its liquid counterpart, even though its capability is comparable. Of the three types of vehicles to be considered in this area--the liquid Nova, the solid Nova, and the solid C-5--only the liquid Nova emerges as a possible candidate for the job. The solid C-5, for example, does not offer any payload capability increase over the advanced Saturn. Second, because it is a solid rocket, it will have very high burnout accelerations and cause man-rating problems. It seems likely that any vehicle that is marginal for manned flight will not be politically salable and may never be built.

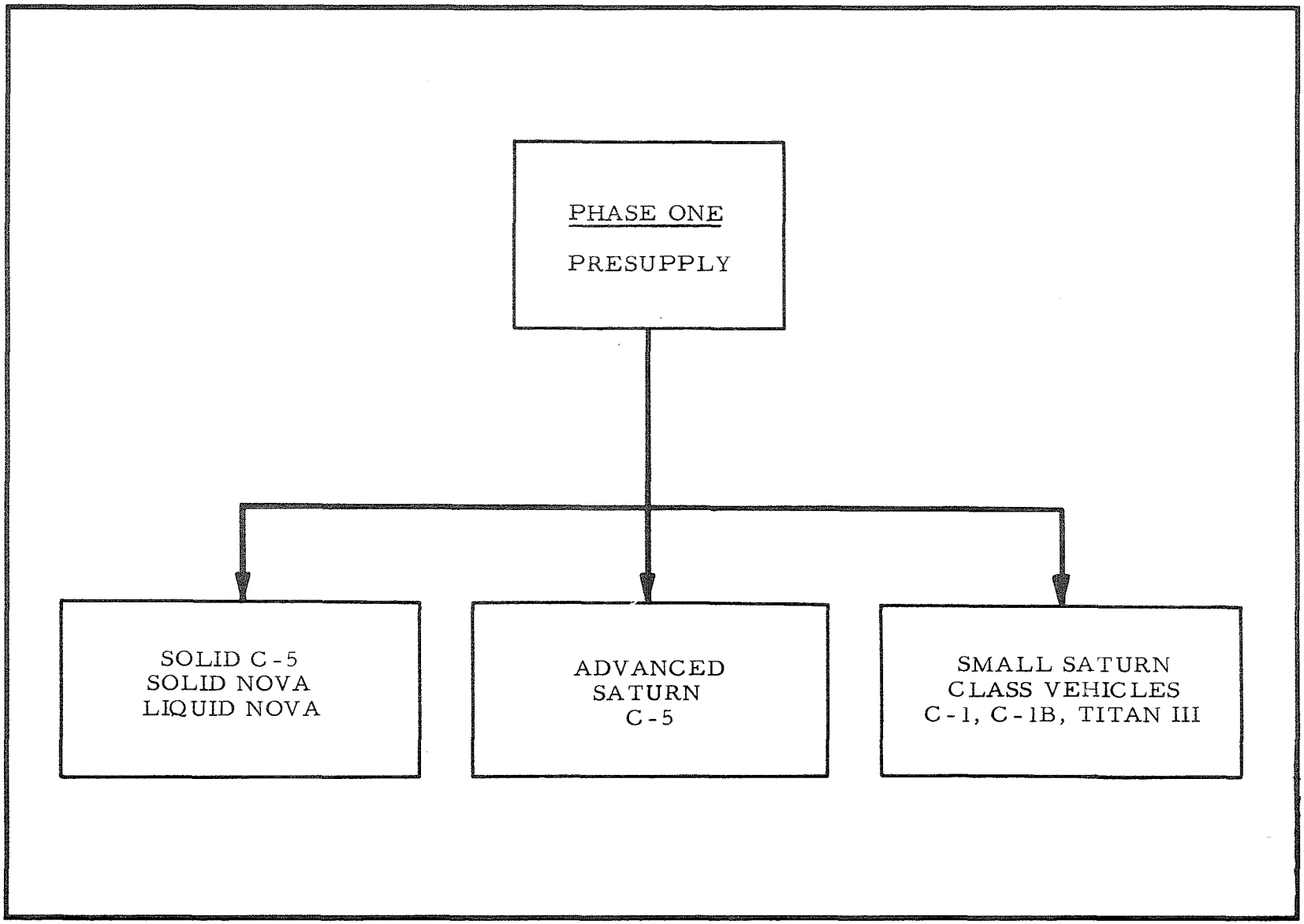

EXHIBIT A1 - LAUNCH VEHICLES FOR PRESUPPLY PHASE

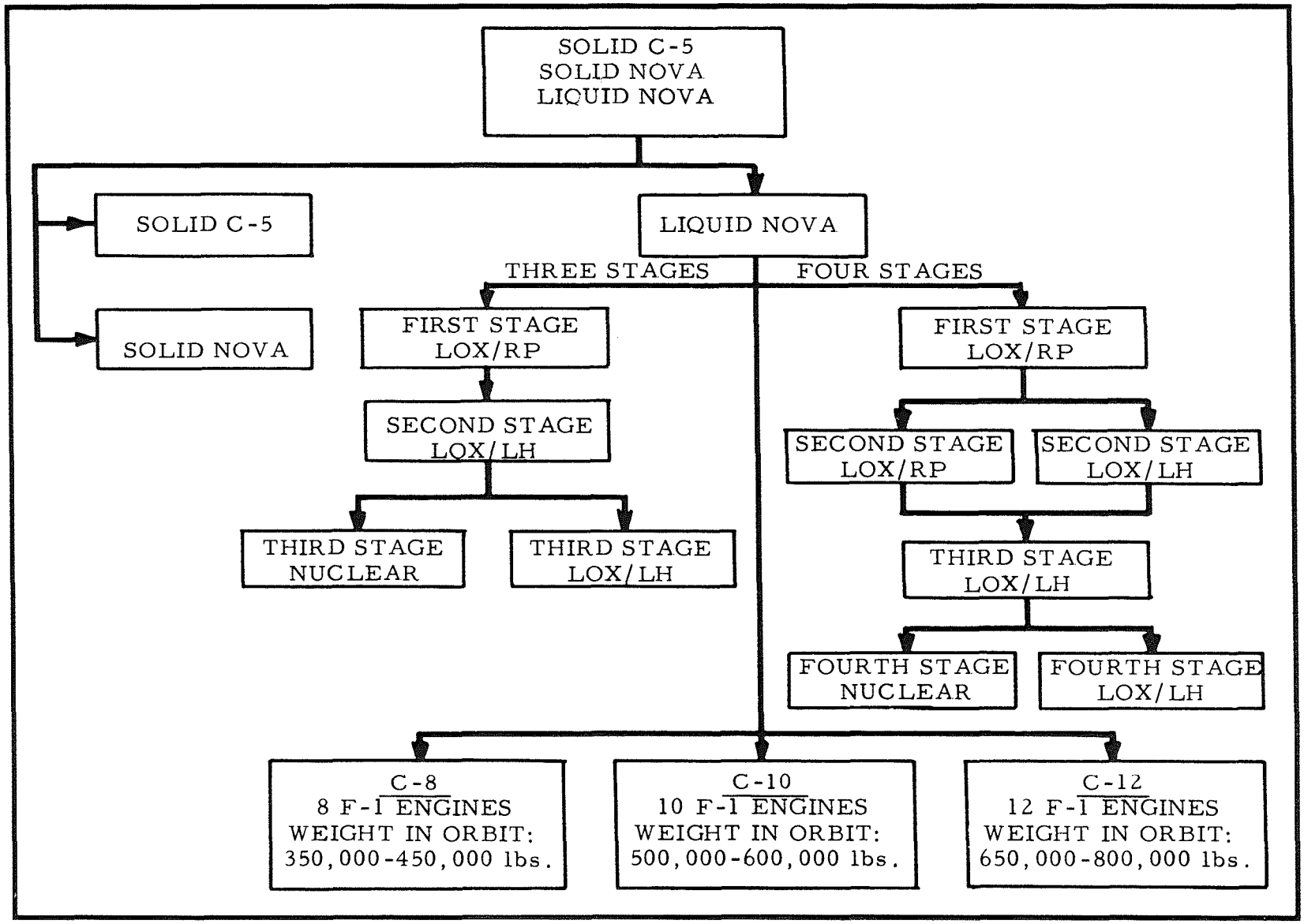

EXHIBIT A2 - NOVA CLASS VEHICLES

The solid Nova suffers from the same handicaps as the solid C-5, i.e., man-rating problems; however, it also has an additional problem. A solid Nova with a performance capability comparable to a liquid Nova will weigh from three to four times a much, i.e., vehicle weights of the order of 30 million to 40 million pounds. Although the solid rocket manufacturers talk about higher reliability and shorter development time for solid Nova's, all present indications are that this vehicle will not be built.

No clear indication of a liquid Nova configuration is available at this time. However, one might speculate on some 18 likely configurations (see Exhibit A2), divided into three classes, C-8, C-10, and C-12 vehicles, where the 8, 10, and 12 denote the number of F-1 engines in the first stage. Each of these classes can be divided into three- and four-stage vehicles, with the three-stage vehicles being compatible with the C-8, and the four-stage vehicles with the C-12. There are two three-stage configurations, one with a nuclear third stage, and one with a chemical LOX/LH third stage. There are four four-stage possibilities--using a nuclear or LOX/LH fourth stage, and/or using a LOX/RP or a LOX/LH second stage. LOX/LH would be the more desirable for the second stage; however, the sheer size of that stage may preclude the use of liquid hydrogen.

Although Nova may be a more desirable booster system to use for presupply, it probably will not be operational for the 1970-1975 time period. Consequently, the most feasible system for presupply use is the Saturn C-5. This system will combine a reasonable payload capability with a wealth of background and experience in its use.

There are two competing operational modes for use of the C-5 in transporting payload to the lunar surface--earth orbit rendezvous and lunar orbit rendezvous (see Exhibit A3). For the Apollo project, the earth orbit rendezvous mode involves the assembly of the S-IVB stage (large version-- 200,000 pounds propellant) in earth orbit, the transfer of the assembled stage to lunar orbit, and the landing of the entire Apollo capsule. The lunar orbit rendezvous mode uses a truncated version of the S-IVB stage (138,000 pounds propellant). First, an earth

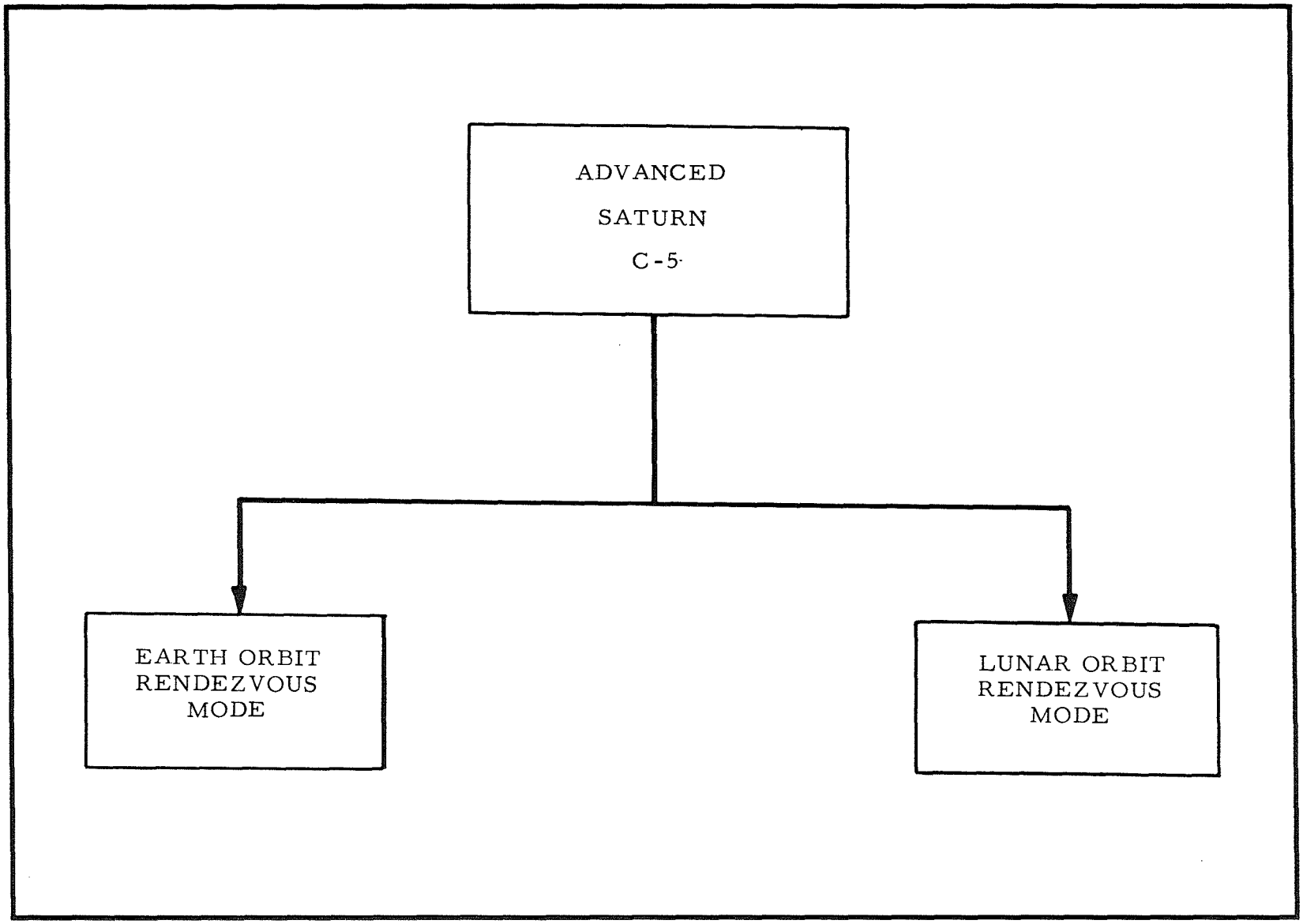

EXHIBIT A3 - COMPETING RENDEZVOUS MODES

parking orbit is effected, from which is made the transfer to a lunar orbit. Finally, two of the three men in the Apollo capsule enter a small landing craft (lunar excursion module, LEM) and descend to the lunar surface. They return to the Apollo capsule by means of a lunar orbit rendezvous between the capsule and the landing craft (LEM). The earth orbit rendezvous technique requires two C-5 vehicles, while the latter mode requires only one.

If instead of the Apollo capsule a cargo carrier is substituted, the EOR mode offers the capability of landing 50,000 pounds on the lunar surface, or 25,000 pounds per C-5. On the other hand, the direct mode can land about 20,000 pounds on the surface. It appears that there is a 25 percent payload advantage to using the EOR mode. However, if the Apollo goes LOR, this advantage could be offset by the increased reliability in using direct flight, due to the lack of experience in using EOR techniques.

Little increased development beyond the Apollo project is required for accomplishing the presupply phase. A cargo carrier replacing the Apollo capsule with the associated landing stage, and a Prospector-type guidance system (or an Apollo guidance system with an unmanned capability) roughly constitute the required additional development.

2. Phase Two: Manned Lunar Landings

In discussing the possible modes for the accomplishment of the manned lunar landings, it is convenient to talk about least probable and most probable routes (see Exhibit A4). At first, two possible routes present themselves: (1) use of the present Saturn capability, or (2) an increase in the present Saturn capability.

Three possibilities are readily attainable for increasing the Saturn capability (there are probably many more):

a. Modify first stage for six F-1 engines plus additional propellant.

b. Strap on solid rockets for first stage.

c. Replace LOX/RP first stage with a LOX/LH stage.

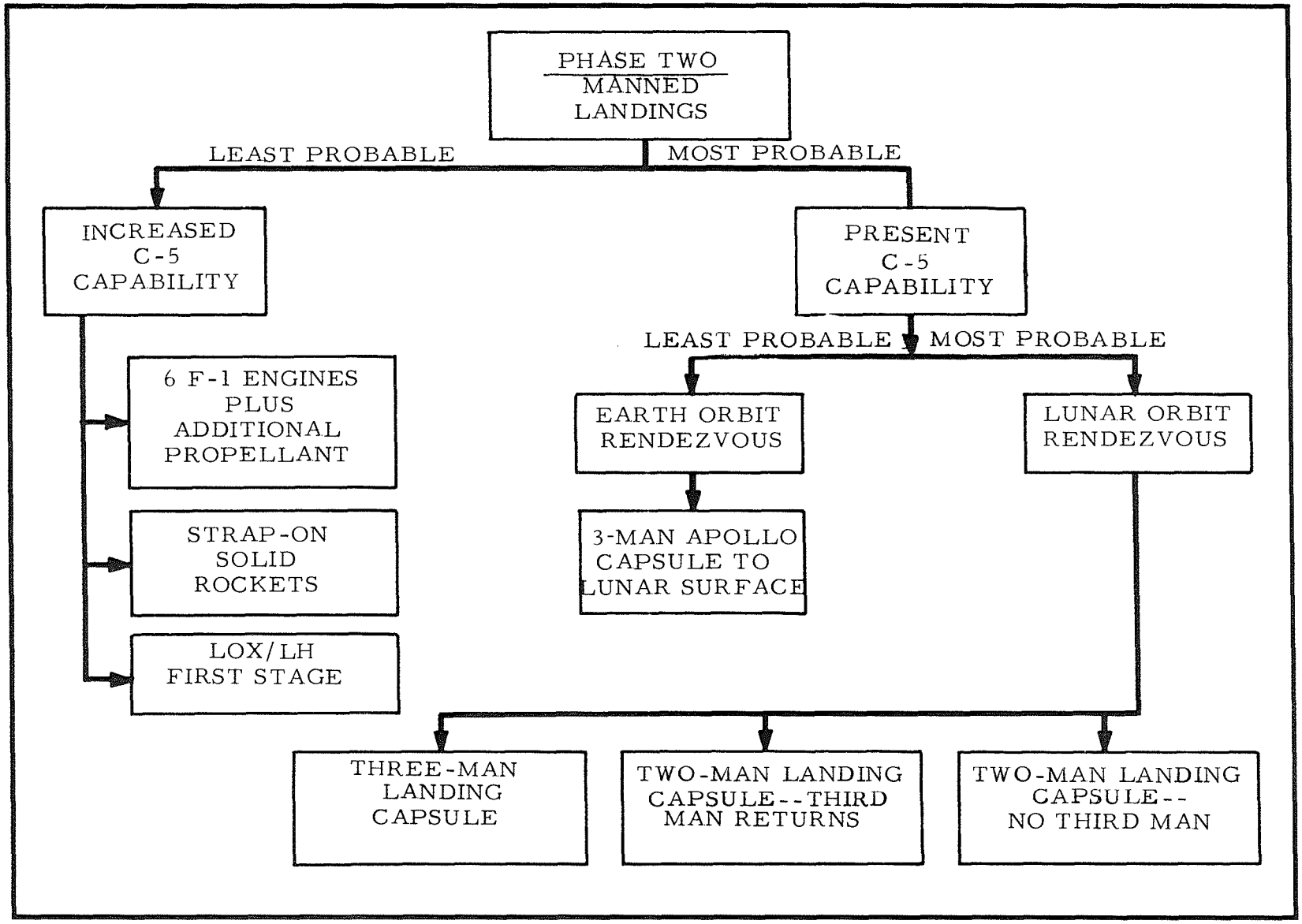

EXHIBIT A4 - CONCEPTS: MANNED LUNAR LANDINGS

It does not seem reasonable that any of the above will be done, because any attempt to increase the C-5 capability will almost certainly result in a Nova. The most probable outcome seems to be to use the present Saturn capability.

If we use the present Saturn capability we again face two possibilities--the EOR mode or the LOR mode. The EOR mode is considered the least likely for two reasons:

a. The Apollo mission will probably use LOR; hence, the benefit of experience accrues to this technique.

b. The EOR mode yields a payload of 1-1/2 men per C-5, while the LOR can land at least two men per C-5 launching.

If we use the LOR mode, we are faced with three more possibilities. First, the Apollo mission can be virtually duplicated in its entirety, with the exception of not returning two of the three men to earth. This has several inherent drawbacks: (1) one-third of the payload is not useful to the establishment of the base, (2) the additional risk of returning the third man is present, and (3) once the third man returns, the two who have landed have relinquished their abort capability should they decide to return, unless other Apollo capsules from previous unaborted landings are still in orbit, or unless a return craft (lunar lifeboat) is supplied as part of the presupply cargo.

A second way of doing the mission is not to send the third man at all. This eliminates the above problems, but requires that the mission be accomplished with two men, and that control for landing be exercised from the landing craft as opposed to the Apollo capsule still in orbit. Both of these methods yield a useful payload of two men per C-5.

A third way, which would be the most desirable, would be to enlarge the landing capsule to accommodate three men and their support equipment. This would maximize the payload by yielding three men per C-5. However, whether or not this can be done, still keeping the payload weight within the C-5 capability, requires further investigation and is as yet unanswered.

3. Phase Three: Logistic Base Support

At this point the permanent base is assumed operational. One is now faced with the logistics problem of resupplying and maintaining the base, rotating the crew, and perhaps even expanding the base size and capability. This part of the discussion lends itself to the consideration of advanced systems (see Exhibit A5).

Since phases one and two will probably occur within a relatively short period of time (about a year), it would be folly to assume that any advanced system not available for those phases would be available for the third phase. Consequently, it should be assumed that sustaining the base initially will be accomplished by the same means as that used for the establishment of the base, i.e., Saturn C-5 vehicles. However, because of the high costs involved in supporting the base, methods for reducing the cost per pound of lunar payload must ultimately be used. This, of course, involves the use of advanced systems.

The first advance that could be made with a minimum of development would be to convert the third stage of the Saturn (S-IVB) into a reusable ferry to transfer payloads between earth and lunar orbits. This would result in a reduction in the payload capability, or require an increase in the performance capability of the S-IVB stage in order to accommodate the return trip propellant. Since the third stage is the cheapest member of the C-5, it is doubtful that much could be saved by doing this. In fact, the increased operational costs and orbital maintenance requirements could more than offset any savings.

Another possibility for reducing costs (i.e., dollars per pound of payload) must await the appearance of a Nova vehicle on the scene. True, a single Nova will cost more than a single C-5; however, this would probably be more than offset by the savings of a reduced number of launchings required to support the base.

At this point there are two major advanced development programs that may be followed; both promise major reductions in operational costs. These are (1) the development and use of nuclear-powered boosters and/or orbital ferries, and (2) recoverable booster systems.

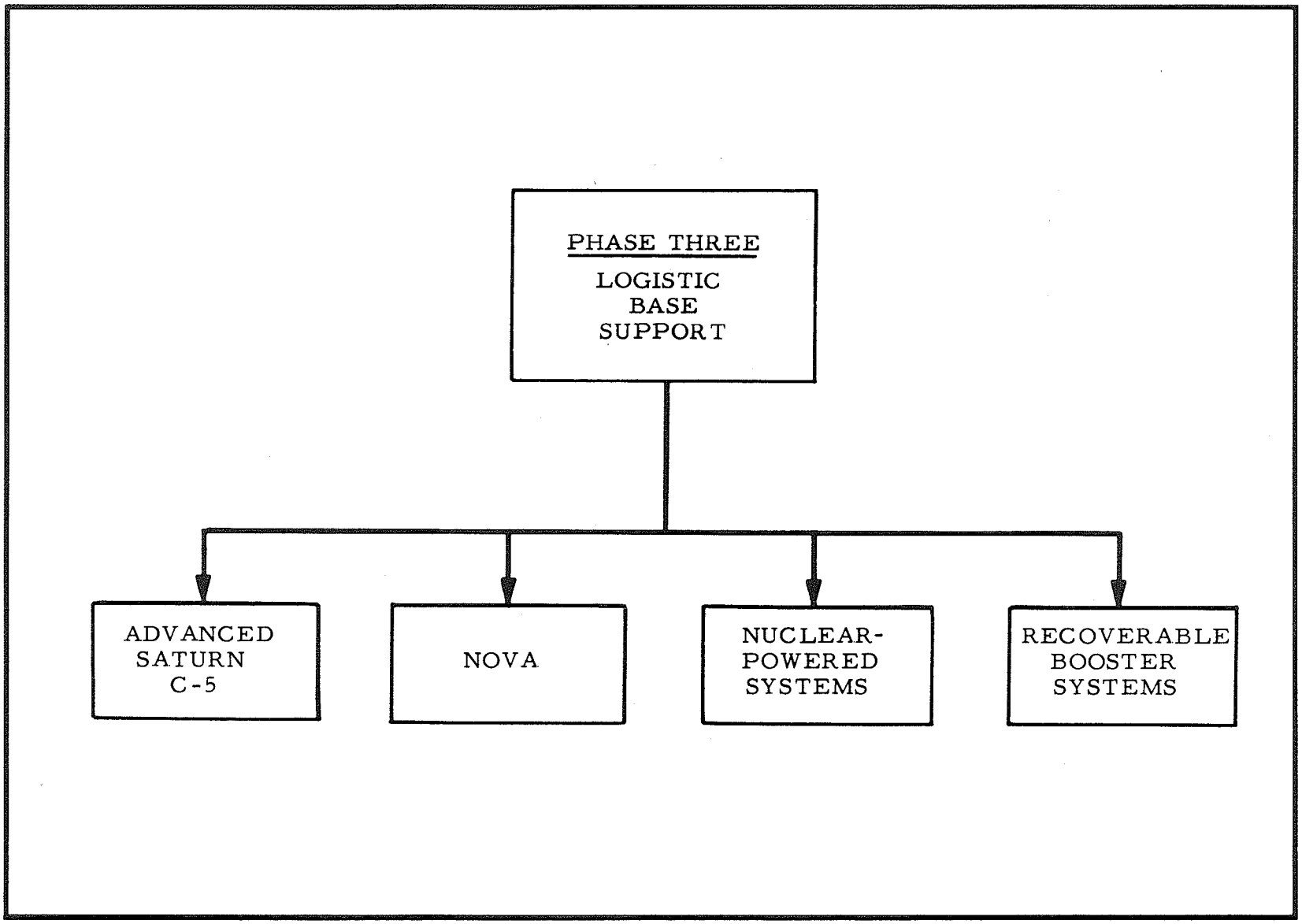

EXHIBIT A5 - LOGISTIC BASE SUPPORT

A number of schemes have been proposed for booster recovery (see Exhibit A6), some employing combinations of such devices as parachutes, dive-brakes, balloons, retro rockets, wings, controlled rotary wings, paragliders, and air-breathing engines. Winged gliders and air-breathing vehicles for booster recovery operations do not appear feasible in the time period under consideration because of the high cost, the time for development, and the performance penalty (i.e., low mass ratio) employing present technology. The other techniques using parachutes, balloons, dive-brakes, and paragliders do show promise, particularly if they are used in combination with each other. A performance penalty will still be paid; however, the dollar savings can be substantial even if an increased number of flights is required to place a fixed number of pounds on the lunar surface.

Perhaps the greatest promise for increased mission capability, with an ultimate reduction in program costs, lies with the use of nuclear-powered systems. There are four regimes in our lunar transportation system in which good use could be made of nuclear vehicles (see Exhibit A7):

a. Booster stages
b. Third or fourth stage for lunar transit
c. Lunar landing stage
d. Earth orbit↔lunar orbit ferry system

Nuclear booster stages, while being the most desirable system of all because of their high thrust potential, are almost certainly beyond the time period under consideration. The technological problems of constructing such a large nuclear system, as well as the very real political problems of launching such a large nuclear powerplant, put this system beyond the first manned lunar base.

A nuclear vehicle such as the NERVA for use as third or fourth stage atop the C-5 or Nova does indeed show real promise. NERVA development is already under way, and the potential payload gain is very real. Preliminary calculations show that a NERVA-size vehicle could put between 20,000 and 80,000 pounds on the lunar surface using conventional chemical landing vehicles. However, the use of such a vehicle only once would be wasteful; it is ideal for use as a lunar ferry.

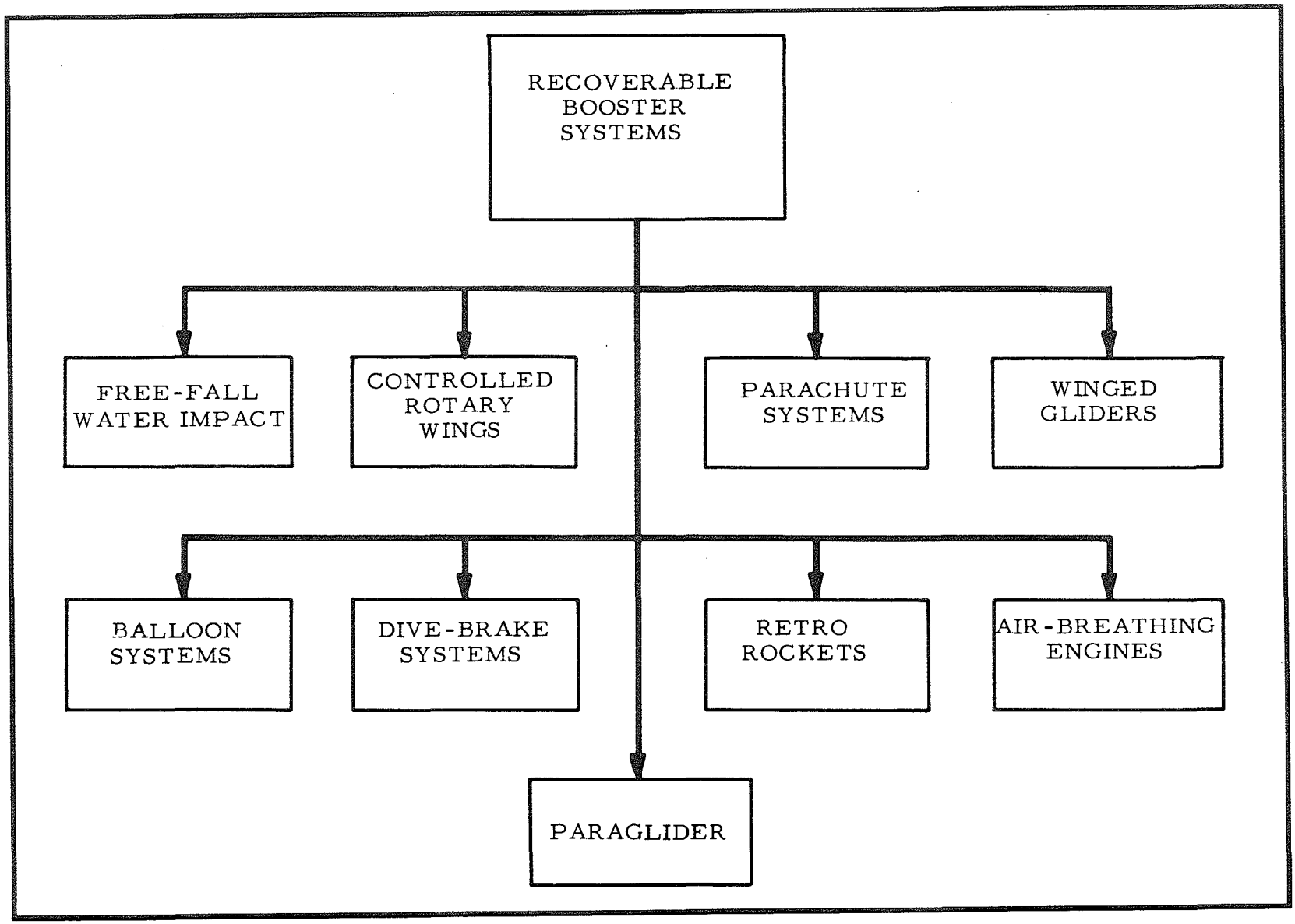

EXHIBIT A6 - RECOVERABLE BOOSTER SYSTEMS

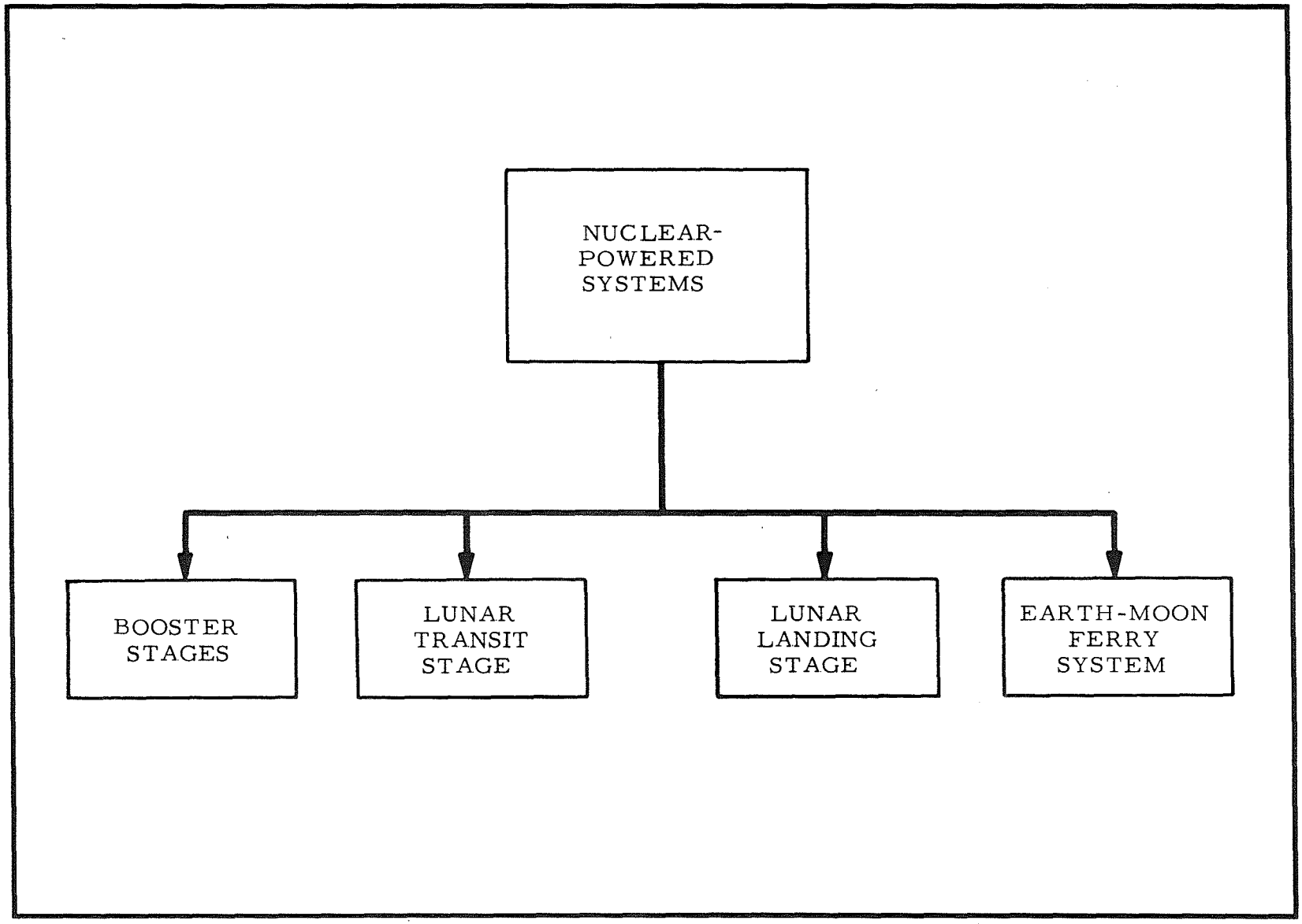

EXHIBIT A7 - NUCLEAR-POWERED SYSTEMS

A nuclear landing vehicle offers the promise of doubling the payload capability of conventional chemical landing vehicles. However, use of such a system as a landing vehicle would pose a number of safety problems for the base, but it is confidently expected that these will be overcome.

Perhaps the earliest use to which nuclear vehicles will be employed is that of a ferry system shuttling between an earth orbit and lunar orbit. Nuclear systems for this purpose can be divided into two types--high-thrust and low-thrust systems (see Exhibit A8).

High-thrust nuclear vehicles are of the ROVER or NERVA type using a nuclear heat exchanger with hydrogen as the working fluid. A vehicle of this type (NERVA size) could use almost the entire capacity of a C-5 for refueling and reloading in earth orbit. Using a chemical landing vehicle, somewhere between 60,000 and 70,000 pounds could be placed on the lunar surface. A vehicle a generation larger than that of the NERVA class would be required if refueling and reloading were to be accomplished using a Nova vehicle.

There are three types of low-thrust systems under development: (1) magneto-plasma, (2) arc-jet, and (3) cesium-ion.

The major drawback to the use of nuclear electric systems is their long transit times. Transit times from earth orbit to lunar orbit of 75 days are typical. However, the payload capability of these vehicles is very high, with payload ratios often higher than 0.5. Consequently, a relatively large amount of payload can be transported with a relatively small vehicle. Hence, these vehicles would find excellent application as cargo carriers. In fact, several of these vehicles could be placed in transit periodically, so that their arrival at the moon occurred at prescribed intervals.

Of the three types of nuclear electric systems, the magneto-plasma is expected to be last in terms of development progress. When such a system becomes available for use as a cargo ferry, it will most likely be of the arc-jet or cesium-ion type. The major drawback to having any of these systems available seems to lie in the problem of developing a nuclear power source large enough and light enough to

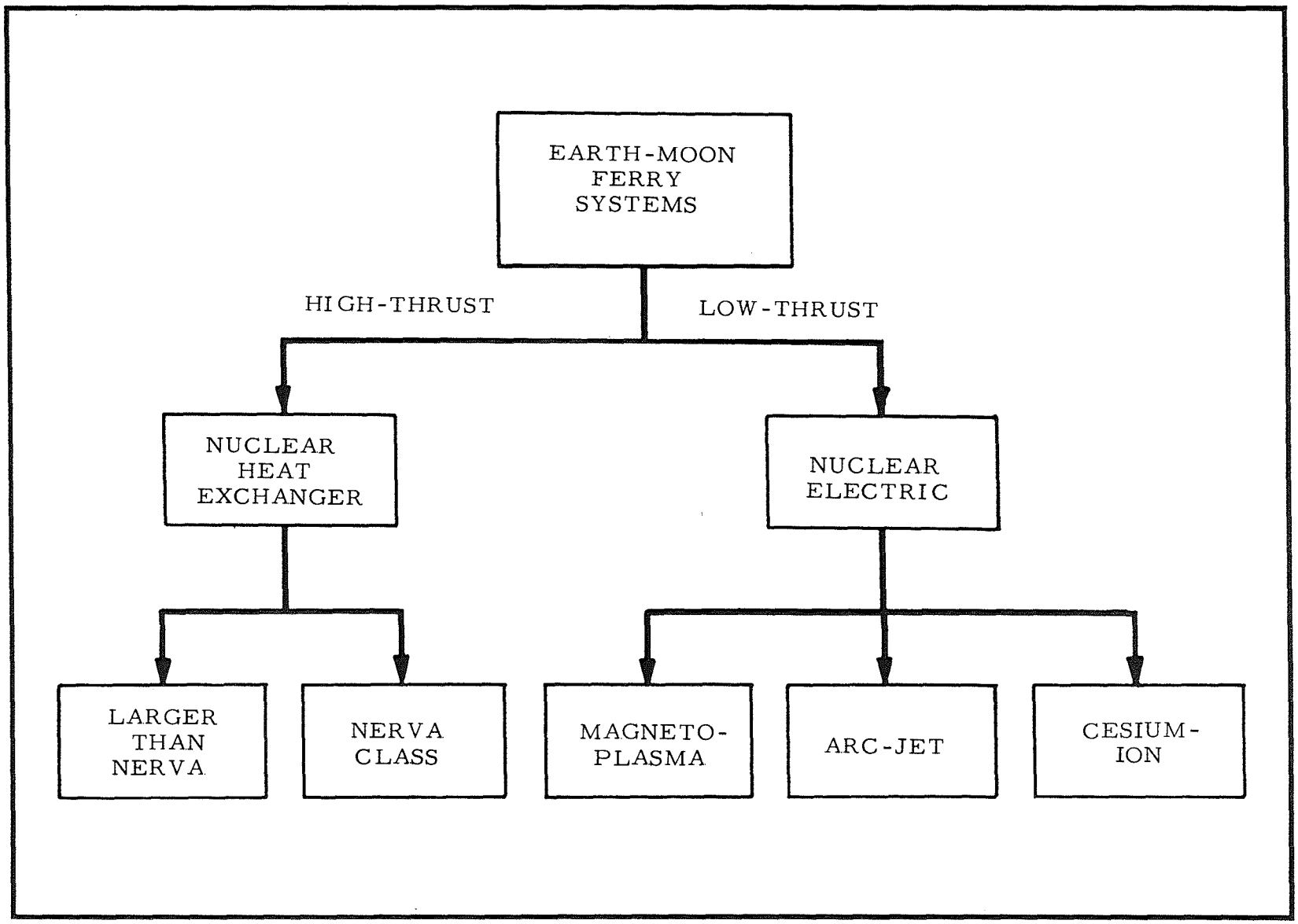

EXHIBIT A8 - EARTH-MOON FERRY SYSTEMS

effectively use the electric propulsion system's inherently low thrust forces. For example, an ion system with a one-megawatt electric nuclear powerplant would have a gross weight of under 40,000 pounds. Consequently, Saturn C-1B's would have to be used for refueling and reloading, and this would be inefficient. In order to make good use of the C-5 as a refueling and reloading vehicle, a 10-megawatt system would be required. A reactor this large for use on a space vehicle may be well beyond the time period under consideration.

APPENDIX B

COMMUNICATIONS

This appendix discusses in a brief and qualitative manner the very broad subject of communications as related to the establishment and operation of a manned lunar base. The broad objectives of the base are to perform geophysical experiments directed toward a better understanding of the lunar surface, its structure, and its origin, as well as studies relating to astrophysical phenomena that can be more accurately explored from the lunar surface.

The discussions are presented in a form that parallels a postulated buildup of the base, major communication requirements, and a summary directing attention to research and development areas of interest from a communications viewpoint.

1. Postulated Buildup

Prior to landing men on the moon, life support equipment and other supplies necessary to the operation of this remote colony will be soft-landed at the base site by means of unmanned capsules. Before a manned landing is attempted, however, the status of the equipment deposited at the base site must be known, since the very existence of the initial lunar base crew depends upon the success of the presupply operation. Telemetered data on landing shock, capsule temperature, status of capsule payload supplies, etc., would partially satisfy this requirement. Similarly, once the equipment is landed, a means should be provided for easily locating the presupply point.

A very simple transponder could be employed to satisfy these requirements. This would consist of a receiver in conjunction with a very limited and simple form of telemetry transmitter. The receiver would be programmed for operation at specified times, and the transmitter would remain off until the receiver was interrogated with the proper code. The same system could be used as a beacon when the

first men land. In this instance, the signal intelligence is of no concern, but the presence of the signal would allow homing or direction-finding techniques to bring the manned capsule to a landing near the supplies.

Once on the moon, the communication requirements are somewhat a function of the modus operandi. If the men move about in space suits, an intercom of the walkie-talkie type is necessary; if they do not move about as individuals but are confined to a single capsule, then a more appropriate two-way voice system is necessary. In any event it would appear desirable to have links between the men on the moon and (1) the lunar orbiting vehicle and (2) the earth or earth-orbiting vehicles.

The data over these links are essentially of two types. The first would be verbal report data for coordination of events and reporting of general findings, progress, and well-being; voice channels would suffice for these functions. The second type of data is comprised of digital or numerical readings of temperature, oxygen supply level, respiration, blood pressure, capsule or suit parameters, etc., and is most suitable for a telemetry link. Since most of the data can be sampled at rather low rates or multiplexed with other data, a very limited bandwidth link is indicated. Depending upon the accuracy required (in this case very little) and future uses of the link, a choice can be made between FM/FM, PAM/FM, PACM, PCM, etc. It may well be that the initial telemetry link will be working far below its normal capacity and well above the initial accuracy requirements; however, since future needs may dictate such a link, it may be efficient from a weight standpoint to use the ultimate rather than start with a system of limited capacity only to have it discarded at some later date because of its inability to handle the increased traffic.

The estimated minimum amount of medical data required for the first men involved in lunar base activities consists of an electrocardiogram (EKG), electroencephalogram (EEG), and measurements of respiration rate and body temperature for each man. The EGK and EEG require 100 cps response and an analog record; the other measurements may be sampled and/or multiplexed. All data would be acceptable if the telemetry system exhibits 5 to 10 percent accuracy.

This type of data will increase as the base personnel increase, until the point is reached where measurements can be monitored and recorded by personnel on the moon with medical responsibility for the base. When medical monitoring shifts to the moon, summary reports via voice channel will replace this type of telemetered data. In a similar manner, certain environmental data such as temperature, humidity, pressure, and concentration of O_2, CO_2, and toxic gases would require initial telemetry channel space, but would be replaced with summary reports as the base grows to full size.

When the base is fully manned and established, a fairly large amount of supplies is required. In addition, crews will be rotated between earth and the moon. To accomplish these functions, a fairly large and regular series of landings and launchings must be made on the moon. The possibility exists that a traffic control system will be required to accommodate these requirements.

At peak operation it is anticipated that a fairly large amount of data, including some requiring television formats, will be transmitted between the lunar base and the earth. Initially, when data amounts are small, the radio equipments on board the lunar or space vehicles can handle the load. Eventually, however, it is desirable to convey the data via an established lunar communication system.

When fully implemented, the lunar communication system should be capable of transmission to and reception from the earth, space vehicles, and other installations on the lunar surface.

2. Communication Between Moon and Earth

To provide some quantitative measure to the requirements of radio links between the earth and the lunar surface, a brief examination was made under the following assumptions:

Path length	= 384,000 km
Desired S/N at receiver	= 20 db
Receiver antenna (earth)	= 60 feet parabolic dish
Transmitter antenna	= Isotropic
Frequency	= 2 kmc
Equivalent receiver temperature	= 300° K

The choice of a 20 db S/N ratio was brought about by the desire to have a figure that safely covered many modulation techniques and resulted in a low error rate. In addition, the upper bound on power is of more interest, since subsequent calculation can then be viewed as containing a good margin of safety.

The choice of 2 kmc was the result of several factors. First, this frequency is well within the transparent region of the earth's atmosphere (Exhibit B1), and is at a point in the frequency spectrum where cosmic noise power is fairly low (Exhibit B2). Second, the NASA Deep Space Instrumentation Facilities (DSIF) are presently designed to operate at this frequency. Third, this frequency is believed to represent a point of reasonable tradeoff among factors such as noise power, atmospheric losses, equipment capabilities, etc.

The 60-foot parabolic antenna at the termination point on earth was similarly chosen as representative of DSIF capability.

Solving the one-way transmission path equation results in an approximate required power of 600 and 6,000 watts, respectively, for bandwidths of 200 kc and 2 mc. If a 2-foot parabolic transmitting antenna (20 db) is used, these powers reduce to 6 and 60 watts. When these figures are reflected into a prime power wherein 10 percent efficiency is assumed, a source is needed to provide power on the order of 600 watts/link to earth.

As related to television, the bandwidths could represent many different capabilities. Representative TV systems might be as follows:

Bandwidth	200 kc	2 mc
Lines/frame	400	400
Elements/line	400	400
Frames/sec	1	10

In terms of a binary data link, the data rate in bits/sec that can be transmitted within these bandwidths is very dependent upon the type of modulation used. The minimum bandwidth requirement for a specified data rate with no allowance for drift, mismatch, etc., varies from direct proportionality to several times the bit rate. Conservative estimates of bit rates for the bandwidths discussed are on the order of 70

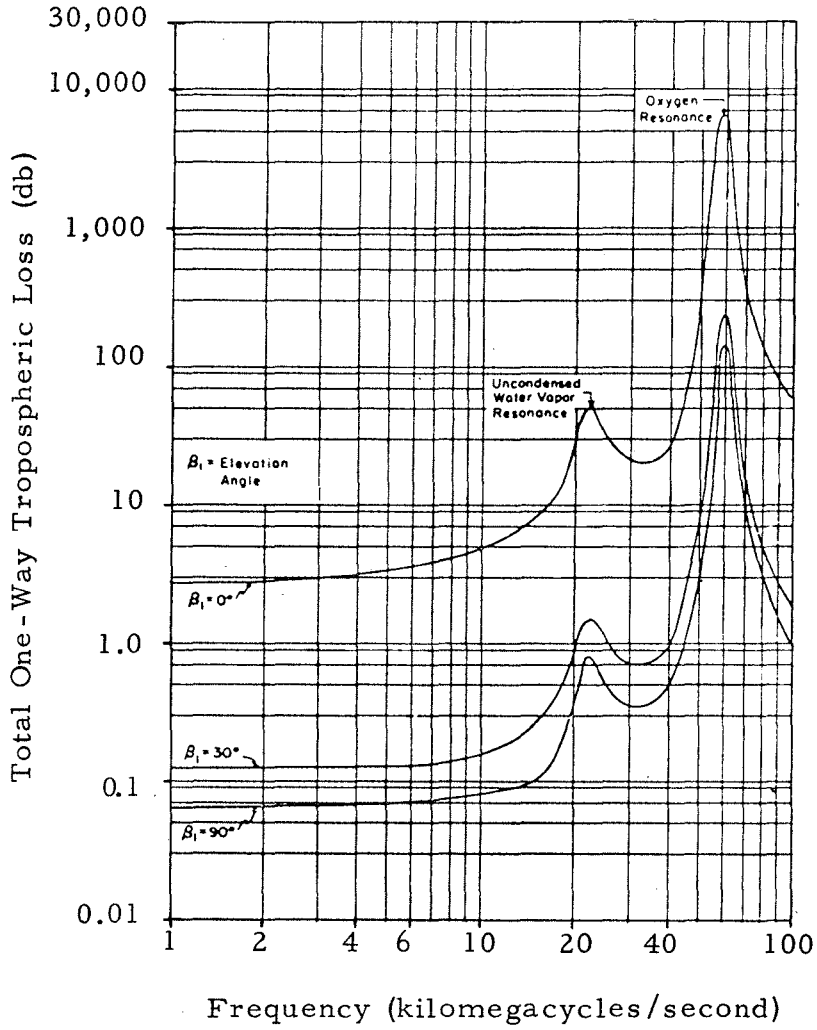

Source: Harold J. Pratt, Jr., IRE Transactions on Communications Systems, December 1960

EXHIBIT B1 - TOTAL ONE-WAY TROPOSPHERIC ABSORPTION

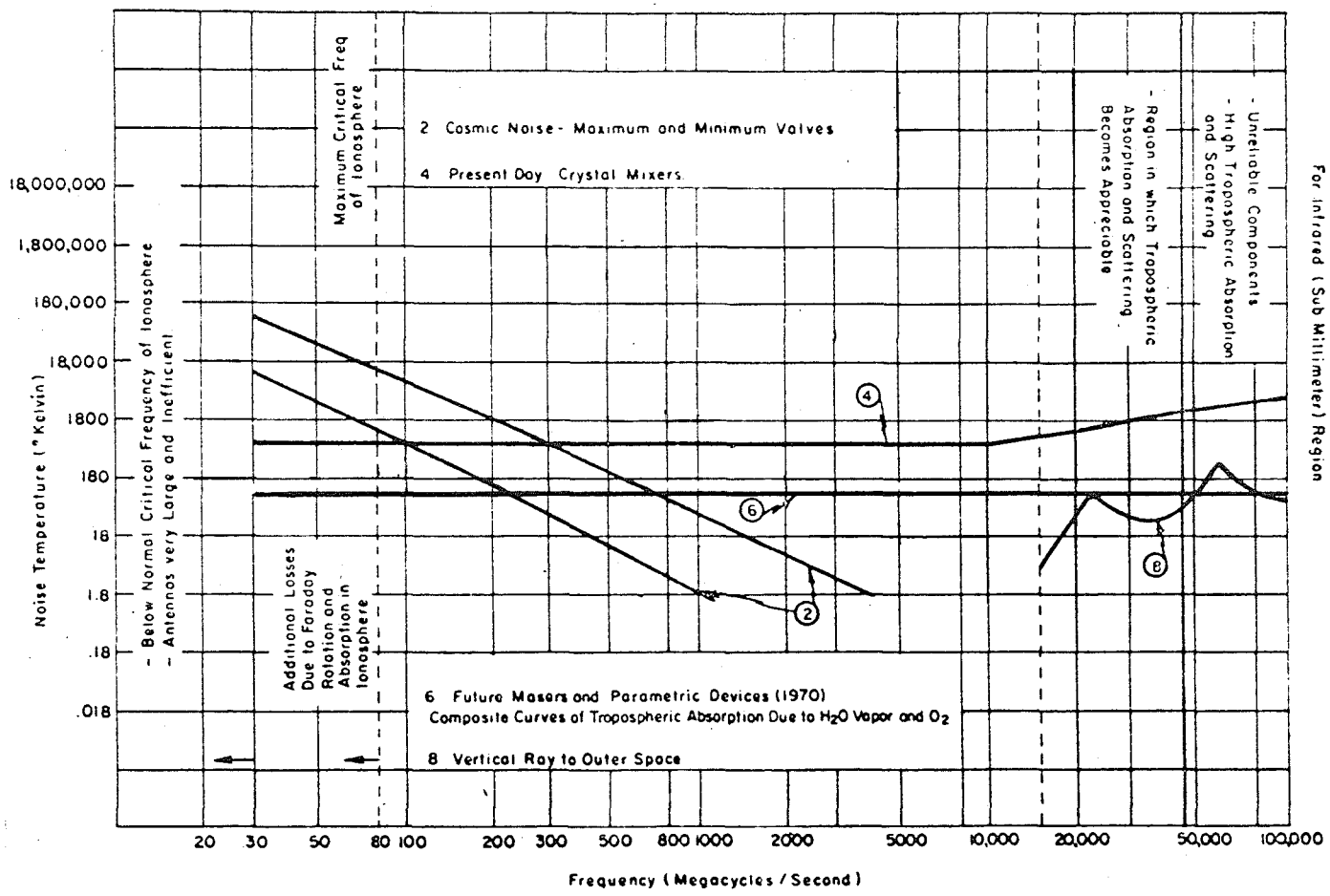

Source: Harold J. Pratt, Jr., IRE Transactions on Communications Systems, December 1960

EXHIBIT B2 - INTERNAL AND EXTERNAL SYSTEM NOISE SPECTRA

and 700 kilobits/sec. These are believed to be well above likely requirements.

From a power radiated and bandwidth viewpoint, there appear to be no major problems in the conceptual design of an adequate communication system for use between the earth and the moon. This does not imply that no effort is needed, but rather that state-of-the-art breakthroughs are not required. There will certainly be a requirement for considerable engineering effort to accomplish the implementation in a logical and efficient manner.

Although not examined in this analysis, it is conceivable that recent developments in lasers and the modulation thereof may provide an alternate mode of transmission. Though not appropriate for the full link (due to the earth's atmosphere), this mode bears investigation for its applicability to portions of the communication path outside of the earth's atmosphere.

3. Communications on the Moon

There are other communication areas and problems that will probably lead to considerable experimentation on the moon. One such problem is that of intersite communication on the lunar surface. Intersite communication in the broad sense includes that from base to base, base to roving vehicles or men, and intercom from man to man outside of controlled environments. There are three primary factors that make this problem unique as compared to similar problems on earth: (1) the moon has no atmosphere, (2) the exact structure and composition of the moon is not known, and (3) the lunar diameter is approximately 1/4 the size of earth's, and therefore horizon distances are smaller. These factors, together with the large component sizes and weights of LF equipment, may force operation at higher frequencies on a line-of-sight basis. In this event, it may be necessary to establish repeater stations at many high points around the lunar base if roving vehicles are to have freedom in exploration. Certainly the measurement of radio conditions at various frequencies will be one of the initial experiments on the moon once the base becomes operational.

4. Summary

The problems that arise in establishing lunar base communications, although unique in environment, require the application of established engineering design. This discussion has attempted to show that the link between earth and moon can be accomplished with reasonable power levels and with equipments designed according to the present state-of-the-art. Major breakthroughs are not required. The fact that all system elements must be transported via space vehicles places particular emphasis on designing a compact, lightweight, and efficient system.

The idealized design would be one of modular construction, wherein system capability could grow and improve without wasting those units already established in the early phases of lunar buildup.

During the early phases of lunar base operation, it is to be anticipated that much raw data will be transmitted to earth. As the base grows, there may be a point at which data processing on the moon and the transmission of results in summary form has a distinct advantage from the standpoint of total weight transported to the moon. Tradeoff analyses of this type are certainly indicated.

Similarly, the incorporation of laser transmission systems, though not without problems, may at some level of operation have certain advantages over operation at radio frequencies.

The major decision that must be reached, in the area of lunar base communications, concerns the choice of transmission media and mode of operation that most efficiently handles the communication requirements throughout the development of the base. This decision must be based on detailed knowledge of communication requirements and tradeoff analyses of weight, cost, and reliability.

APPENDIX C

SELECTED TECHNICAL CONSIDERATIONS RELATIVE TO LUNAR BASE CONSTRUCTION

1. Layout of Lunar Ports

A lunar base will necessarily have facilities designed to receive six landings per month of both manned and cargo transports over a period of one year. At present no one has a clear idea as to how to design a rocket port on the moon, or on the earth for that matter. The port provides the following:

a. Designated areas for rocket landings
b. Designated areas for rocket takeoffs
c. Service transport for cargo handling
d. Protected facilities for space vehicles and for material on the lunar surface
e. Network of roads
f. Storage facilities for supplies of all kinds

The layout of the base must be designed with the traffic patterns in mind. Assuming that the operation employs a lunar orbiting system, the rockets will customarily deorbit and approach the base from a fixed direction. If equatorial orbits are used, and if the base is on the equator, then rockets will approach the landing area from the east or the west. The base must be designed so that an abort will not destroy important facilities.

Exhibit C1 suggests one possible base layout. Six major landing areas surround the base, each with a potential of one rocket landing per area per month. The base is located at the center. Each landing pad must be separated from the others and from the central base by a distance, D, sufficient to provide protection from the normal hazards associated with landing operations. These hazards are as follows:

a. The downrange and crossrange landing errors described as a landing CEP
b. Dust, rock, and debris kicked up by the exhaust of a landing rocket

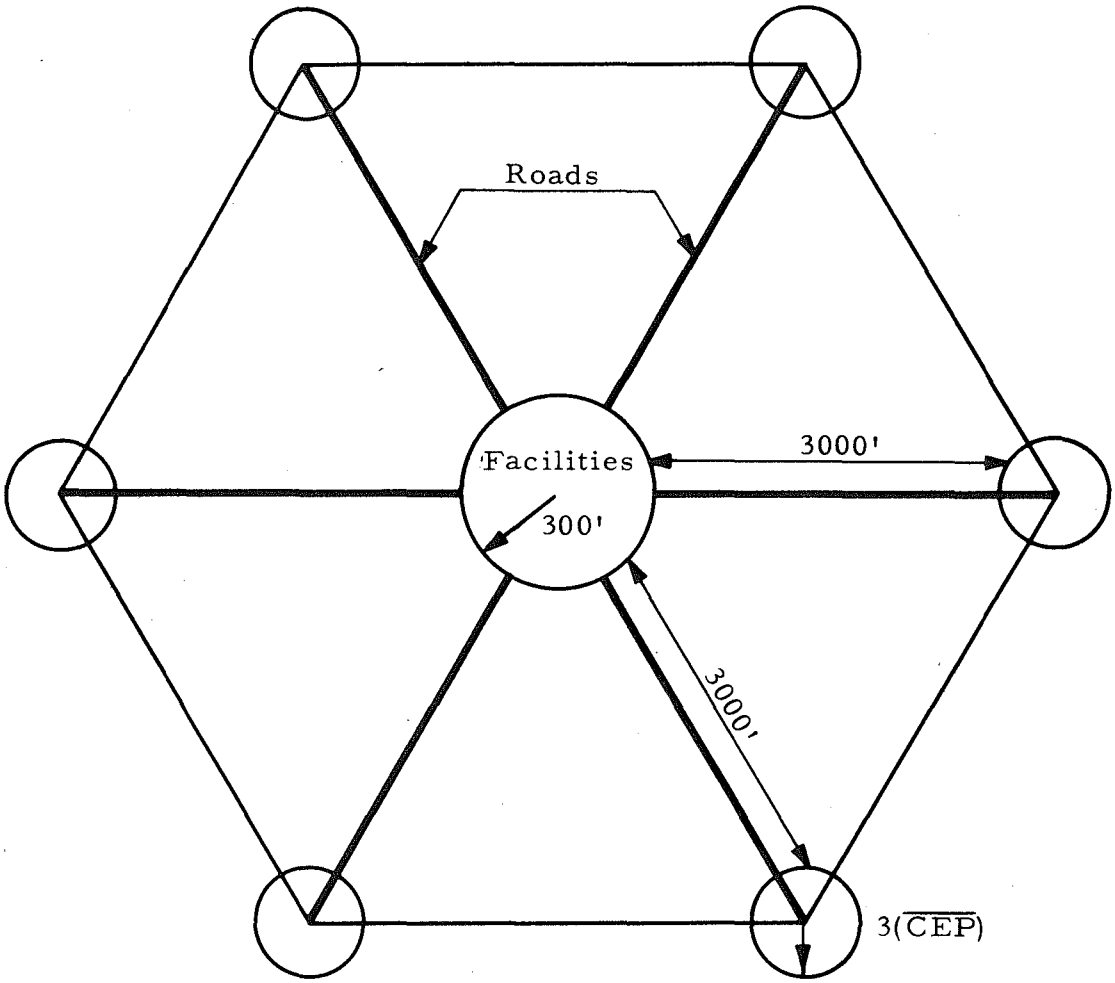

EXHIBIT C1 - SCHEMATIC OF LUNAR BASE LAYOUT WITH A CENTRAL BASE AND SIX LANDING AREAS

c. A surface explosion from an aborted vehicle

d. A subsurface explosion from an aborted vehicle

The distance D must be selected to provide reasonable protection against a missile landing on the wrong pad because of a miss distance several times the CEP. Now the CEP remains undetermined, but the base design indicates that a small CEP is desired. Surface conditions may compel the crew to prepare a pad for the missile to land; if the CEP is large, then a large area must be prepared. If preparation of the surface is required, then CEP's of thousands of feet may place a great burden on the logistics system or the construction crew. The requirements for the base indicate that CEP's of the order of hundreds of feet or less are desirable. These small CEP's can be achieved with a terminal guidance system. The separation between landing pads, as governed by this estimate for CEP, would be of the order of a few hundred feet.

The dust kicked up from the surface of the moon and accelerated by the rocket exhaust can present another hazard. Objects travel great distances over the moon with moderate velocities; Exhibit C2 contains a plot of distance versus velocity and graphically illustrates this point. The number of particles of dust per square centimeter on the lunar surface is not known, nor is the size of the individual grains. As a result it is not possible to estimate the number of particles that will be blown around (Reference 1). Although some surfaces may be relatively clean, it is probable that dust particles or rocks exist in large numbers on all parts of the lunar surface. Protection from this threat can be provided comparatively easily by revetments. Although information is lacking, intuitively it seems probable that the dust particles on the surface that would be accelerated by the rocket exhaust would follow low angle trajectories. If all surface objects were shielded by revetments that subtend at any angle of perhaps 20° elevation, they would be protected from all the particles kicked up by the rocket exhaust. Because of the geometry, these revetments cover a horizontal arc of about a 120° at each landing pad to protect from landings at any of the other five pads.

An explosion above the surface may occur if an incoming rocket aborts, falls, and hits the surface. The explosion will be a low order

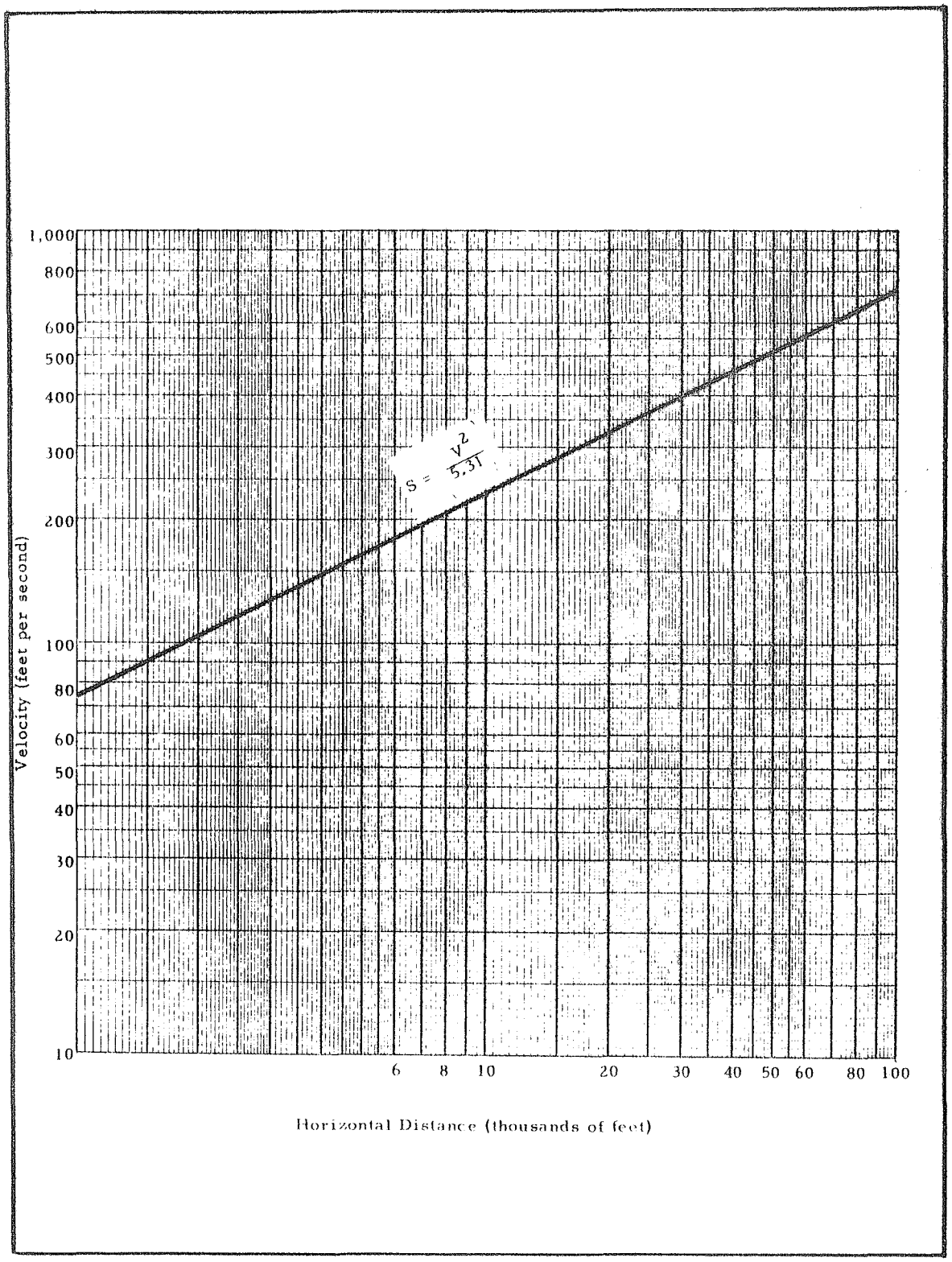

EXHIBIT C2 - DISTANCE OF MINIMUM ENERGY TRAJECTORIES ON THE MOON

detonation, but could accelerate vehicle and rock fragments to velocities sufficient to travel great distances over the lunar surface (Reference 2). We can make an estimate of the hazard at various distances from this type of explosion. Since the vehicle may be in any position at the moment of explosion, there is little purpose in considering a specific example, such as a missile on end.

For simplicity, consider that on the average the rocket material is distributed with spherical symmetry and is centered about the explosion. Then the material contained in this spherical sector, bounded by two cones each with its apex at the center of the sphere, will be deposited after the explosion in a circular ring centered about a distance S and a thickness ΔS (see Exhibit C3). If the velocity is great enough, there will be two regions from which material will reach the area indicated, one centered about angle θ_1 in the sphere and the other about angle θ_2 in the sphere, corresponding to the depressed and lofted trajectory. The density of material deposited on the surface varies directly with the amount of material in the two zones on the sphere and inversely with the area of the ring on the surface.

If the total number of particles is N_o, then the number N leaving on trajectories with angles of inclination equal to θ or larger are given by the equation

$$N = \frac{1}{2} N_o (1 - \sin \theta)$$

and the first derivative of this expression is

$$\frac{dN}{d\theta} = - \frac{1}{2} N_o \cos \theta$$

Assuming for the moment a flat lunar surface, the distance S that a particle will travel is given by the formula

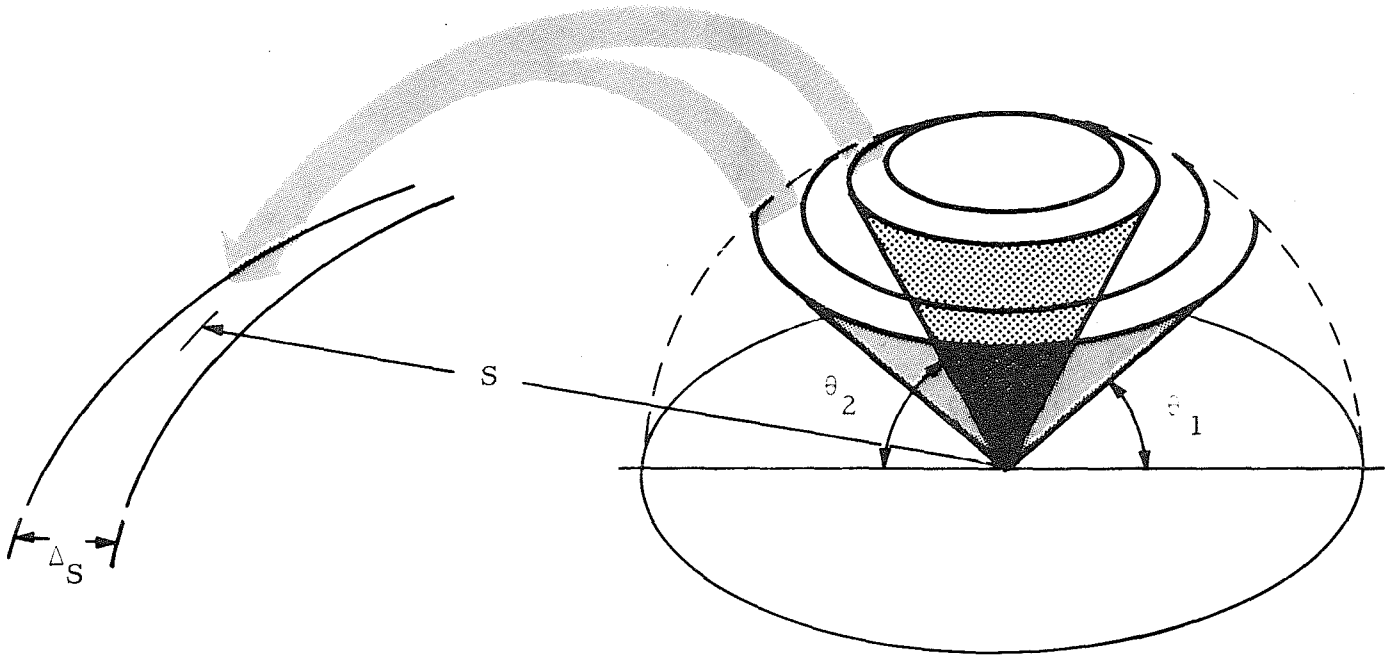

EXHIBIT C3 - DISTRIBUTION WITH SPHERICAL SYMMETRY

$$S = \frac{V^2}{g} \sin 2\theta$$

The total area on the lunar surface A contained within the distance S is given by

$$A = \pi S^2 = \frac{\pi V^4}{g^2} \sin^2 2\theta$$

and the derivative of this with respect to the angle θ is

$$\frac{dN}{d\theta} = \frac{4\pi V^4}{g^2} \sin 2\theta \cos 2\theta$$

Thus we have, for the number of particles striking each unit of area, the formula

$$\sigma_H = \frac{dN}{DA} = - \frac{N_o g^2}{16\pi V^4} \frac{1}{\sin \theta \cos 2\theta}$$

Another useful form involves S rather than V.

$$\sigma_H = \frac{N_o}{8\pi S_o^{\ 2}} \left[\frac{\sin 2\theta \cos \theta}{\cos 2\theta} \right]$$

Here σ_H is the number to land on the horizontal surface. If σ_V is the number to strike a vertical surface, then

$$\sigma_V = \sigma_H \cot \theta = \frac{N_o g^2}{16\pi V^4} \frac{\cos \theta}{\sin 2\theta \cos 2\theta}$$

and alternately

$$\sigma_V = \frac{N_o}{8\pi S_o^{\ 2}} \frac{\sin 2\theta \cos \theta^2}{\sin \theta \cos 2\theta}$$

Exhibits C4 and C5 show plots of a relative density of particles striking the lunar surface as a function of the distance S, with V held constant.

In any explosion the particles will have a varying velocity distribution. Some particles will arrive at a point in distance S by trajectories approaching 45°; those moving with higher velocities will reach the same area with a lower trajectory angle. We have no information as to the velocity distribution of particles ejected from an explosion, but such data may be available from on-pad explosions at AMR. If it is assumed that the velocities are equally distributed with respect to V^2, then the total number of particles landing at any fixed point, at a distance S_o from the point of explosion, is given by the formula

$$n = - \frac{N_o}{4\pi S_o^2} \int_{\theta_1}^{\theta_2} \frac{\sin 2\theta \cos \theta}{\cos 2\theta} Q(\theta) d\theta = \frac{N_o}{4\pi S_o^2} \left(\frac{\cos \theta_1 - \cos \theta_2}{1 - 2 \sin \theta_2} \right)$$

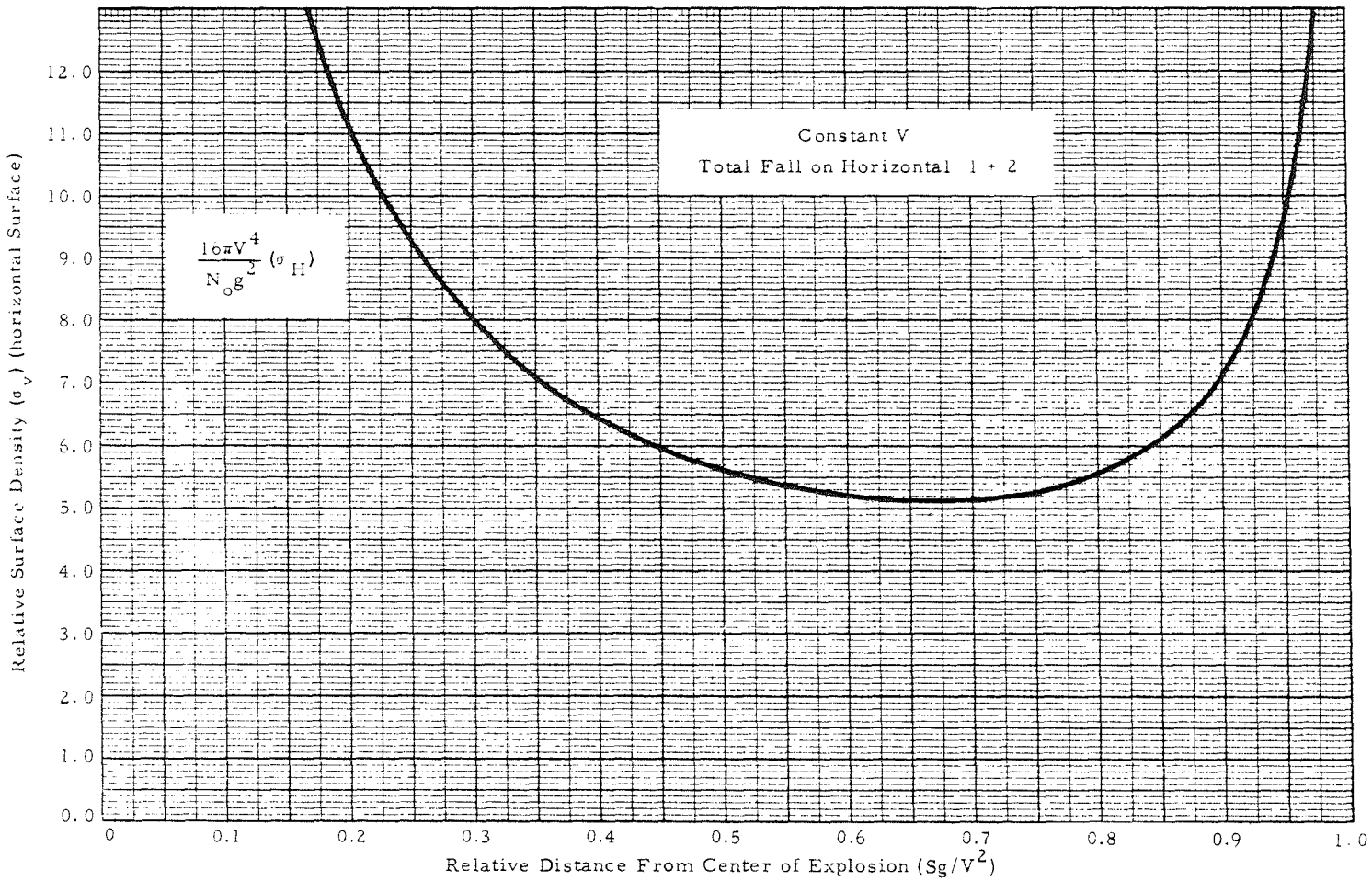

EXHIBIT C4 - RELATIVE DENSITY OF MATERIAL FALLING ON HORIZONTAL SURFACE

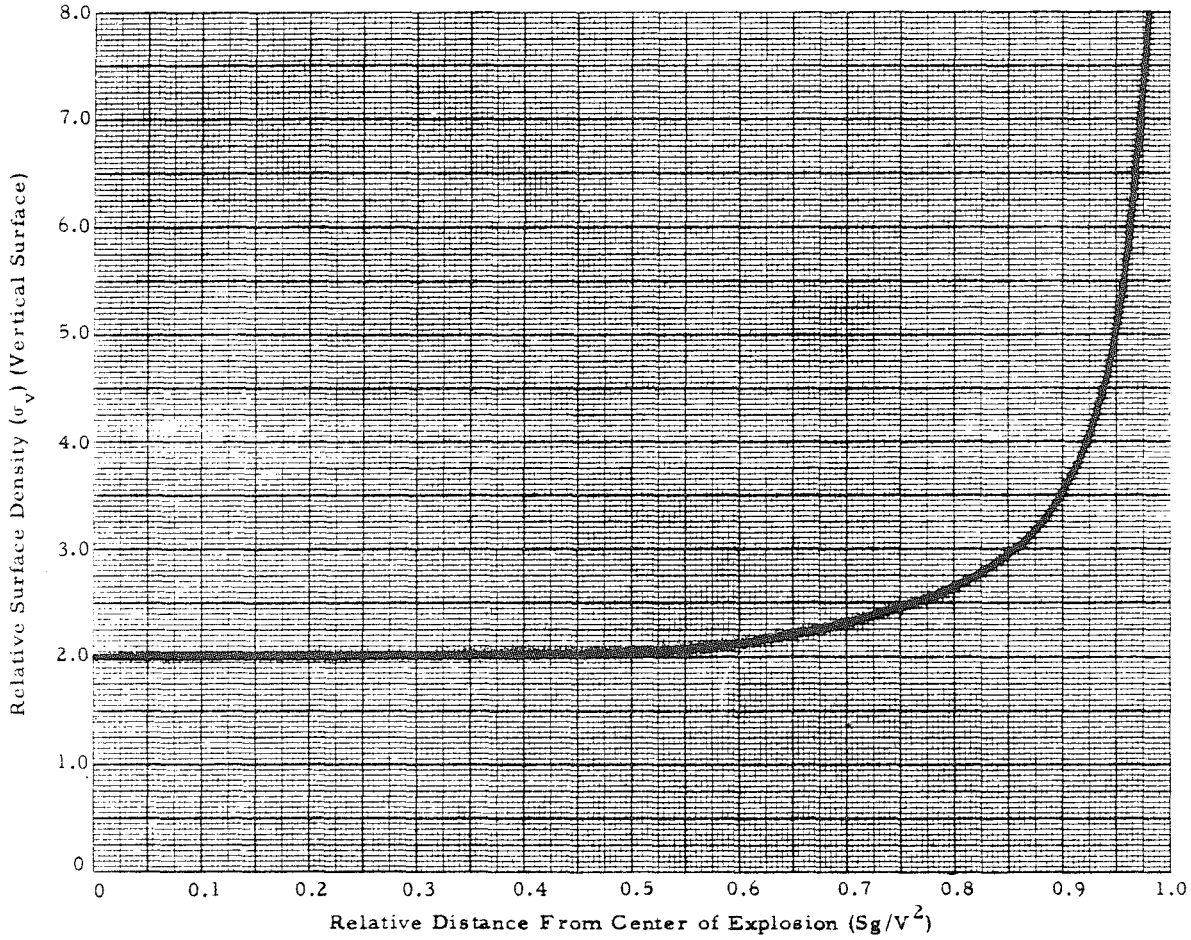

EXHIBIT C5 - RELATIVE DENSITY OF MATERIAL FALLING ON VERTICAL SURFACE

where $Q(\theta) = \frac{\cos 2\theta}{1 - \sin 2\theta_1}$ is the weighting factor.

If revetments are built around each object to shield it from particles arriving at angles equal to θ_3 or less, then these formulas with the total number of particles striking each horizontal square centimeter are

$$n = \frac{N_o}{8\pi S_o^2} \frac{\cos \theta_2 - \cos \theta_3}{1 - 2 \sin \theta_2}$$

If the area is unshielded

$$n = \frac{N_o}{8\pi S_o^2} \frac{\sin \theta_2 - \cos \theta_2}{1 - 2 \sin \theta_2}$$

As a conservative approximation to both of these, we assume that the number of particles striking each square centimeter will be given in the practical case in the formula

$$n = \frac{N}{4\pi S_o^2}$$

If a velocity distribution other than the one assumed proves more reasonable, the form of the equation may remain invariant, but the value of the constant changes.

The probability P of a fragment striking a missile having an exposed surface of area B is then given by the formula

$$P = 1 - e^{-\left(\frac{BN_o}{4\pi S_o^2}\right)}$$

Solving for the distance S_o, one then has

$$S_o = \left[\frac{BN}{4\pi P}\right]^{1/2}$$

As a numerical example, assume that N is 10,000 particles (liberated in an explosion), that the exposed B is 1,000 square feet, and that the desired probability of one particle striking the missile is between 0.5 and 0.01; then the distance S is calculated as lying between 1,100 and 9,000 feet.

Of course the existence of revetments will reduce the number striking. If the revetments intersect an angle of 45° with the horizon, as viewed from the sheltered object, then the probability of a particle striking an object will be less than half the unshielded value.

Underground explosions present a different form of threat, because fragments of the lunar crust may be thrown to a great distance by the explosion. An underground explosion might occur if a rocket coming in for a landing were to malfunction and fall and impact on the lunar surface with high velocity, bury itself into the lunar surface, and then explode. Shoemaker (Reference 3, page 331) dealt extensively with

the impact of meteors upon the lunar surface and the formation of craters by the ejection of debris. His theory indicates the amount of material ejected at various angular elevations and their range; the minimum limiting angle for ejection into ballistic trajectories is about 6°. Fragments ejected at angles of 6° to 14° form material deposited on the rim in a series of over-arching trajectories. Fragments ejected at angles ranging from about 14° to 22° form the major part of the material ejected. Between ejection angles of 22° and 43° the smaller volume of the material ejected is widely scattered over the lunar surface. Above 43° the fragments are ejected into escape trajectories.

Therefore, if revetments are erected to protect objects from fragments entering at angles between 14° and 22°, then protection will be provided from underground explosions.

The four hazards to surface facilities mentioned above suggest the following corrective actions:

a. CEP of landing: each pad shall be 3 CEP in radius.

b. Dust kicked up by exhaust gases: height of revetments surrounding critical installations should cast a 10° to 20° shadow angle over the highest point of the installation.

c. Surface explosions: separation distances, D, should be between 1,100 and 9,000 feet.

d. Subsurface explosions: revetments should cast a 22° shadow angle over the highest point of the installation.

2. Terminal Guidance and Traffic Control

A lunar port must have regulated traffic lanes and regulated landing zones. The landing areas must be stabilized to resist the erosion of exhaust gases. These requirements imply terminal guidance so the rockets can land upon the comparatively small prepared pads.

Two types of terminal guidance systems may be employed on the lunar surface. The first system operates before the base is established, while the second operates on a more permanent basis. The temporary

system must be established before the transports begin the presupply operations. This preliminary system enables the presupply rockets to land in the prescribed areas. Several methods may be used to position the initial terminal guidance equipment, such as transponders, at the site:

a. A precursor crew may land on the lunar surface, inspect the area, survey the site, and place beacons or transponders in precisely located areas.

b. A precursor rocket may land at a centrally located spot, carrying a beacon on board to guide successive rockets to the proper area.

c. The initial rocket may land at the center of the area, and emplace a number of beacons around it by firing small transport rockets, each carrying a transponder.

Other means readily suggest themselves for emplacing the initial terminal guidance equipment in the proper areas.

Once the base is in operation, the possible systems become numerous. They include the following:

a. Ground-based radars, computers, and data transmitters to "talk the rocket down."

b. Spaceborne interceptors and computers and ground-based transponders.

What CEP is required? If the lunar surface must be stabilized to resist the rocket exhaust, then the weight of material and number of man-hours to prepare the site become important. These considerations suggest CEP's of the order of 1 to 100 feet. If a rocket can land on the unprepared lunar surface, then the requirement for CEP can be relaxed.

There are several factors which influence the choice of CEP. First, objects will disappear below the horizon at comparatively short distances. From a height h, in feet, the distance in miles to the horizon d is

$$d = 0.64\sqrt{h}$$

Assuming that a rocket is 25 feet high, and a man standing on top of a moon mobile is 16 feet high, the man can see the rocket only if it is within 5.8 miles of his position. If we assume that a man searching for a rocket goes to the expected impact point, and sees the rocket with 95 percent probability, then the CEP is of the order of 2 miles.

Second, if the cargo rockets land over an extended area, then a significant number of man-days may be spent traveling to and returning from distant rockets. Assuming that the surface vehicle can average 40 miles per day with a crew of two, then the number of man-days expended traveling to each rocket, T_i, is

$$T_i = \frac{6 \times (CEP) \times 2}{40} = \frac{3(CEP)}{10}$$

If the number of rockets used in construction is 40,

$$T = 40T_i = (12)\ (CEP)$$

The total construction phase consumes about 2,000 man-days. Thus, the fraction of time, f, spent in travel is given as

$$f = \frac{12\ CEP}{2{,}000} = \frac{CEP}{167}$$

$$f = \frac{CEP}{167} \quad .$$

Thus, CEP must be substantially less than 167 miles; otherwise the crew will spend a large part of the time en route to the cargo rockets.

3. Diffusion of Heat from Underground Cylindrical and Spherical Modules

Plans for lunar bases often include feasibility studies of burying facilities under the surface, in tunnels, in caves, or in trenches. These living quarters will maintain constant temperature near +22° C (72° F) by either supplying or removing heat. The undisturbed lunar rock, a few feet below the surface, will be at subzero temperatures estimated by various authorities to be between -30° C and -63° C. Thus, a temperature drop between 52° C and 62° C exists between the inside of the living facilities and the undisturbed remote lunar rocks.

Temperature gradients will rapidly be established with heat flowing from the warm rooms into the cold rock. The temperature distribution and heat flow will be governed by the equations (Reference 4).

$$\nabla^2\theta = \frac{\rho c}{K}\frac{\partial\theta}{\partial t}$$

$$Q = K\int\frac{\partial Q}{\partial q}\,dA \qquad (1)$$

where θ = temperature

ρ = density

c = specific heat

t = time

Q = heat flux

K = thermal conductivity

A = area

q = a coordinate

For practical purposes we can consider the steady state case with a constant temperature. Then Equation (1) reduces to

$$\nabla^2\theta = 0 \qquad (2)$$

Only two examples will be considered here.

A sphere of radius R_o:

$$\theta = \theta_o \frac{R_o}{R}$$

An infinitely long cylinder of radius R_c:

$$\theta = \theta_o \frac{\log R}{\log R_c} + C$$

If θ_o is 54° C, then the total heat dissipated by the sphere is

$$Q = 4\pi R_o^2 K \left.\frac{d\theta}{dR}\right|_{R=R_o} = (4\pi R_o K)(54)$$

The heat dissipated per unit length of an infinite cylinder is

$$q = 2\pi R_o K \frac{d\theta}{dR} = \frac{2\pi \times 54 \times K}{\log R_o}$$

and the heat lost over length ℓ is given as

$$Q = q\ell$$

As representative of a lunar base, we consider a cylinder 12 feet (366 cm) in diameter and 240 feet (7,135 cm) long. The spherical lunar

base with the same volume as this cylinder has a radius of 568 cm. The total heat lost expressed in calories and kilowatts is contained in Exhibit C6 for bases established in several interesting materials.

The minimum power dissipated in the base amounts to about 8 kw--close to the 9 kw dissipated through the walls of a cylindrical base. Exhibit C7 contains an estimate of the thermal energy liberated in the base.

Thus, we expect the base must radiate heat. We note in passing that the U.S. Army constructed cylindrical huts deep in the Greenland icecap, and operated these in a thermal environment approximating the lunar crust.

4. Temperature-Depth Variation of Lunar Near Surface

The temperature of the lunar surface varies through wide limits as the moon rotates on its axis, exposing successively different sides to the sun. William M. Sinton (Reference 3, p. 416) gives the variation of temperature, $T(x, t)$, with depth, x, and time, t, as

$$T(x,t) = \sum_{n=1}^{\infty} T_n e^{-2\pi n^{\frac{1}{2}} x/\lambda} \cos\left(2\pi \frac{nt}{P} - 2\pi n^{\frac{1}{2}} x/\lambda + Q_L t_n\right) \cos \Psi_L + T_o$$

$$\lambda = 2\left(\frac{\pi P K}{\rho C}\right)^{1/2}$$

where $T(x, t)$ = temperature in ^{o}K

x = depth in cm

t = time in seconds

n = the number of the Fourier harmonic

λ = a parameter equivalent to wavelength

C_n = a phase angle

EXHIBIT C6 - HEAT LOSS FOR BASES IN DIFFERENT SURROUNDING MATERIALS

Substance	Basic Thermal Characteristics (cal/cm sec)	Sphere (kg cal/sec)	Sphere (kilowatts)	Cylinder (kg cal/sec)	Cylinder (kilowatts)
Basalt	0.0052	2.0	8.4	2.2	9.2
Marble	0.0084	3.2	13.6	3.5	14.8
Sand	0.00086	0.40	1.7	0.36	1.5
Water	0.0015	0.58	2.4	0.63	2.6
Terra cotta	0.0023	0.89	3.7	0.97	4.1
Ice	.005	2.	8.4	2.2	9.2

EXHIBIT C7 - ESTIMATE OF THERMAL ENERGY LIBERATED IN THE BASE

Source	Energy (kilowatts)
20 Men	3.0
Lights (240 lunar feet fluorescent lights)	3.2
Cooking	0.5
Life support	1.0
Total	7.7

P	=	a period in seconds
ρ	=	density of surface material in gm/cc
C	=	specific heat in cal/gm
K	=	conductivity in cal/cm sec
Q_L	=	the selenocentric longitude
Ψ_L	=	the selenocentric latitude
T_o	=	the constant component

The same reference lists, for the first four terms, the Fourier parameters given in Exhibit C8.

EXHIBIT C8 - FOURIER PARAMETERS

n	T_n	ϵ
0	210° K	-
1	157	-6°
2	34	$+6^\circ$
3	30	159°

If the lunar surface is composed of material with the thermal properties of basalt rock as shown in Exhibit C9, then the Fourier components will decrease with depth as shown in Exhibit C10. The higher frequencies will vary even more rapidly with depth. At a depth of 300 cm or more, the variation is small, and approaches a constant value of 210° K; this value differs from the more generally accepted -30° C to -40° C, (263° K to 253° K), but agrees closely with 220° K selected by Giraud (Reference 5). If a layer of dust covers the surface, the insulating properties of this layer will reduce the fluctuations at depth.

EXHIBIT C9 - DATA FOR CALCULATING THERMAL CONSTANTS

Quantity	Units	Basalt Rock
K	cal/cm sec	.0052
ρ	g/cm^3	3.0
C	cal/g	0.20
P	1 sec	2.55×10^6
λ	cm	528

EXHIBIT C10 - VARIATION OF FOURIER COMPONENTS WITH DEPTH

Depth (cm)	T_1 (degrees)	T_2 (degrees)	T_3 (degrees)
0	157	34	30
20	124	24	20
40	98	18	13
60	77	13	8.8
80	61	9.0	5.9
100	48	6.4	3.9
200	15	1.2	0.5
250	7.3	0.49	0.2
300	4.6	0.2	0.1
400	1.4	0.0	0.0
500	0.4	0.0	0.0

5. Multistory Facilities: Cylindrical and Spherical Configurations

The amount of square footage available for living must include enough headroom for a man to move about easily. The room should be designed so that the floor is flat and level. Within a cylinder of radius R, the useful floor area per unit length, A, with headroom, r, is given by the formulas

$$A_1 = 2\sqrt{R^2 - \frac{1}{4}r^2} \qquad \text{One story}$$

$$A_2 = 4\sqrt{R^2 - r^2} \qquad \text{Two story}$$

$$A_3 = 2\sqrt{R^2 - \frac{1}{4}r^2} + 4\sqrt{R^2 - \frac{9r^2}{4}} \qquad \text{Three story}$$

$$A_4 = 4\sqrt{R^2 - r^2} + 4\sqrt{R^2 - 4r^2} \qquad \text{Four story}$$

Of course, R must be large enough to accommodate the appropriate number of stories.

Exhibit C11 is a plot of the area A per unit length for multistory facilities having cylindrical walls with 8 feet of headroom allowance.

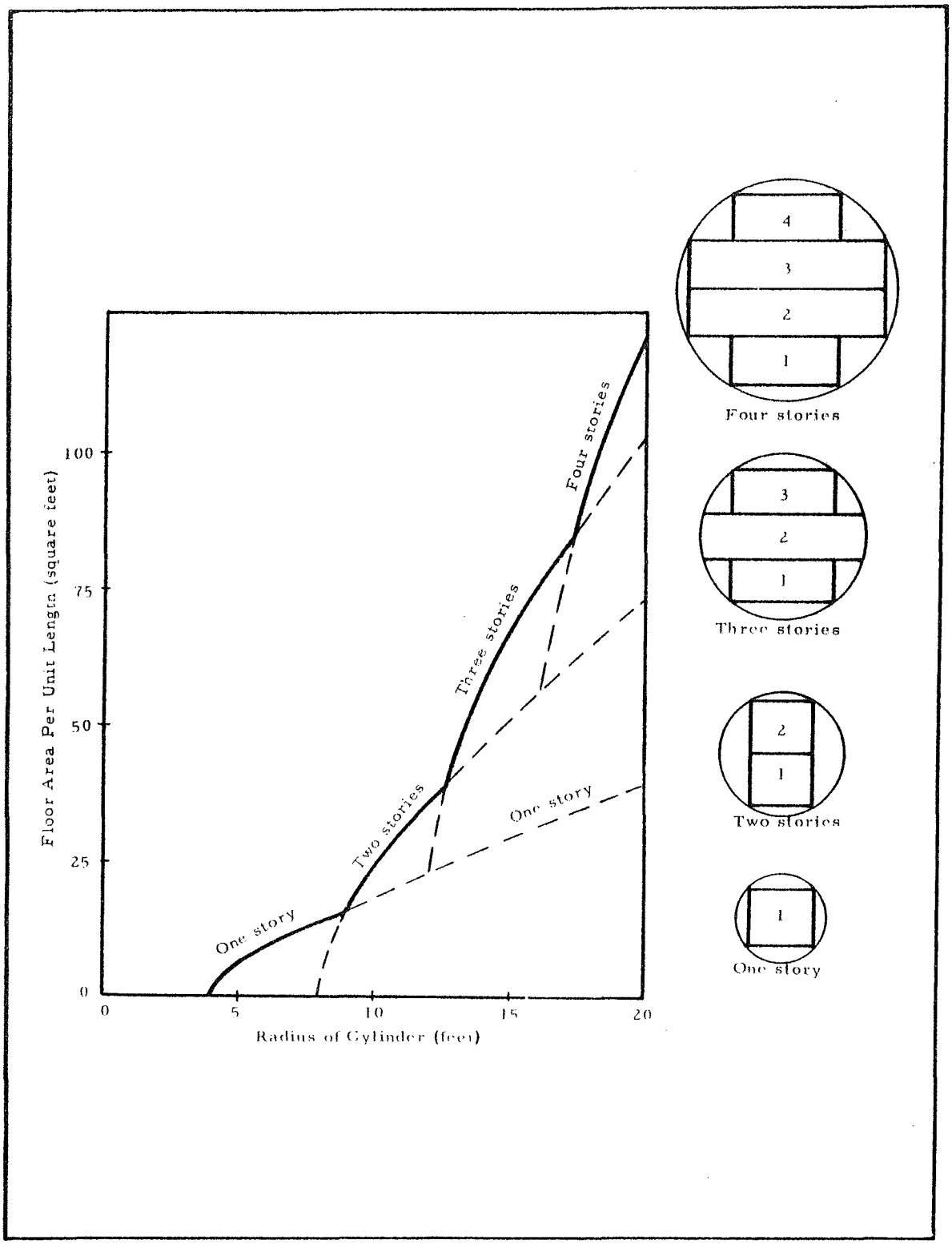

EXHIBIT C11 - FLOOR AREA PER FOOT OF CYLINDER LENGTH (8-FOOT HEADROOM)

For spheres, the total floor space with headroom, r, or greater is given by the formulas

$$B_1 = \pi(R^2 - 1/4\,r^2) \qquad \text{One story}$$

$$B_2 = 2\pi(R^2 - r^2) \qquad \text{Two story}$$

$$B_3 = \pi(R^2 - 1/4r^2) + 2\pi(R^2 - \frac{9r^2}{4}) \qquad \text{Three story}$$

$$B_4 = 2\pi(R^2 - r^2) + 2\pi(R^2 - 4r^2) \qquad \text{Four story}$$

$$B_5 = \pi(R^2 - 1/4r^2) + 2\pi(R^2 - \frac{9r^2}{4}) + 2\pi(R^2 - \frac{25}{4}r^2) \qquad \text{Five story}$$

Exhibit C12 contains a plot of the total floor space as a function of the radius of spherical configurations of one to five stories.

Exhibit C13 contains a plot of the length of the cylindrical section L, versus radius, R, of multistory cylindrical modules with hemispherical ends, 8-foot headroom, and floor areas ranging from 500 to 4,000 square feet.

Exhibit C14 contains plots of the total volume of cylinders with hemispherical ends.

In addition to spheres and cylinders, other shapes should be considered for the base modules. The curved surfaces of spheres or cylinders provide structural advantages to withstand the pressure difference between the internal pressure and the outside void. Exhibit C15

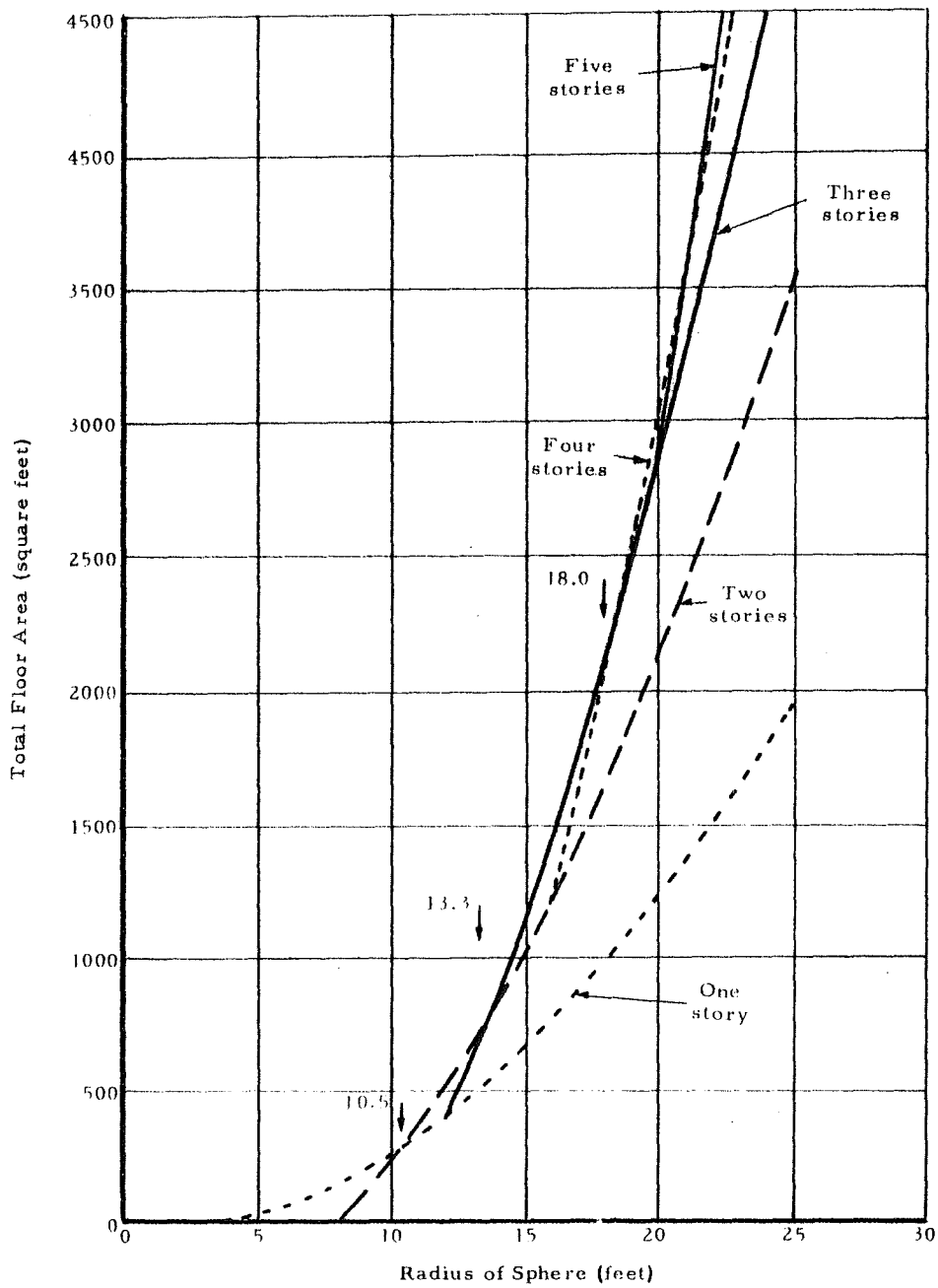

EXHIBIT C12 - USABLE FOOTAGE WITH 8-FOOT HEADROOM IN SPHERE

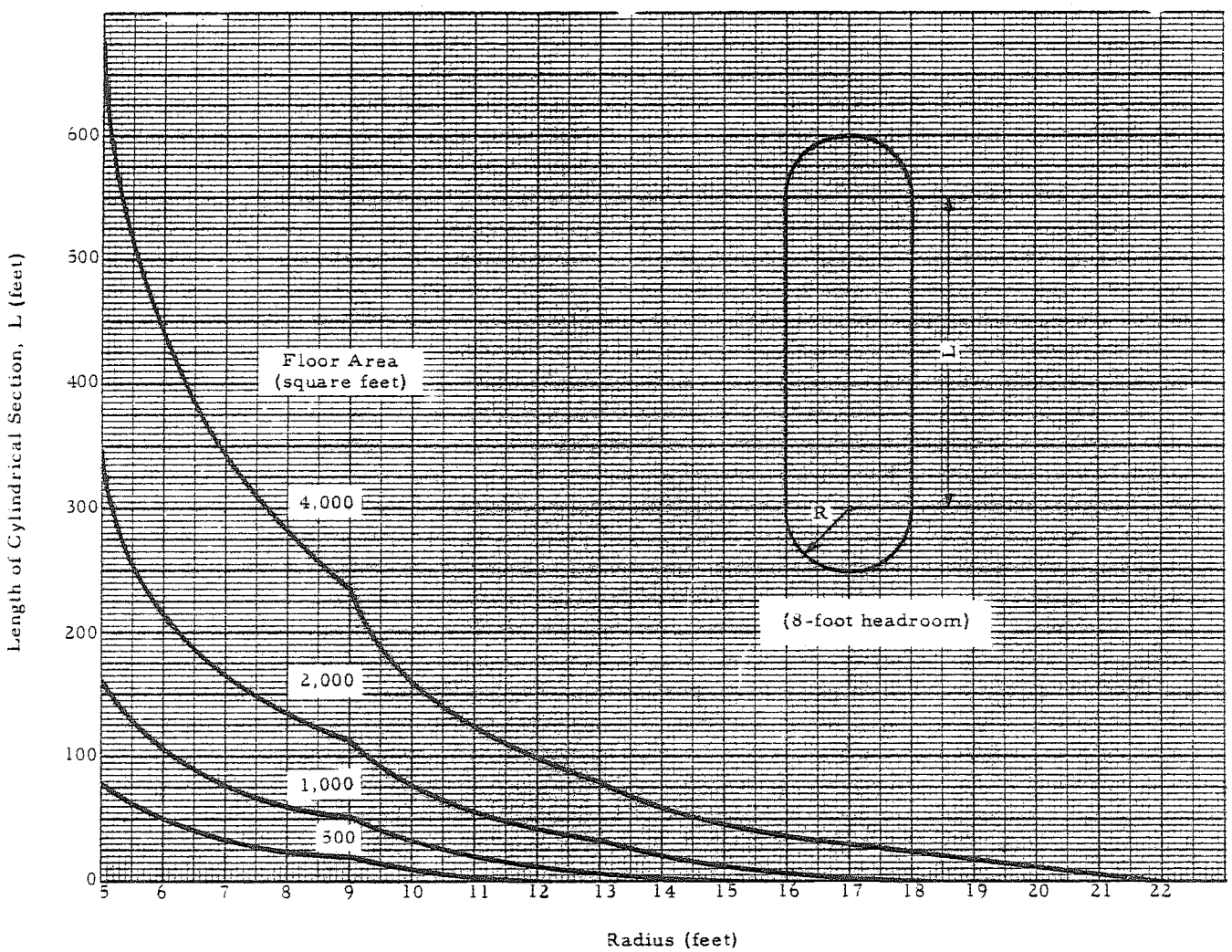

EXHIBIT C13 - LENGTH OF CYLINDRICAL MODULE VERSUS RADIUS

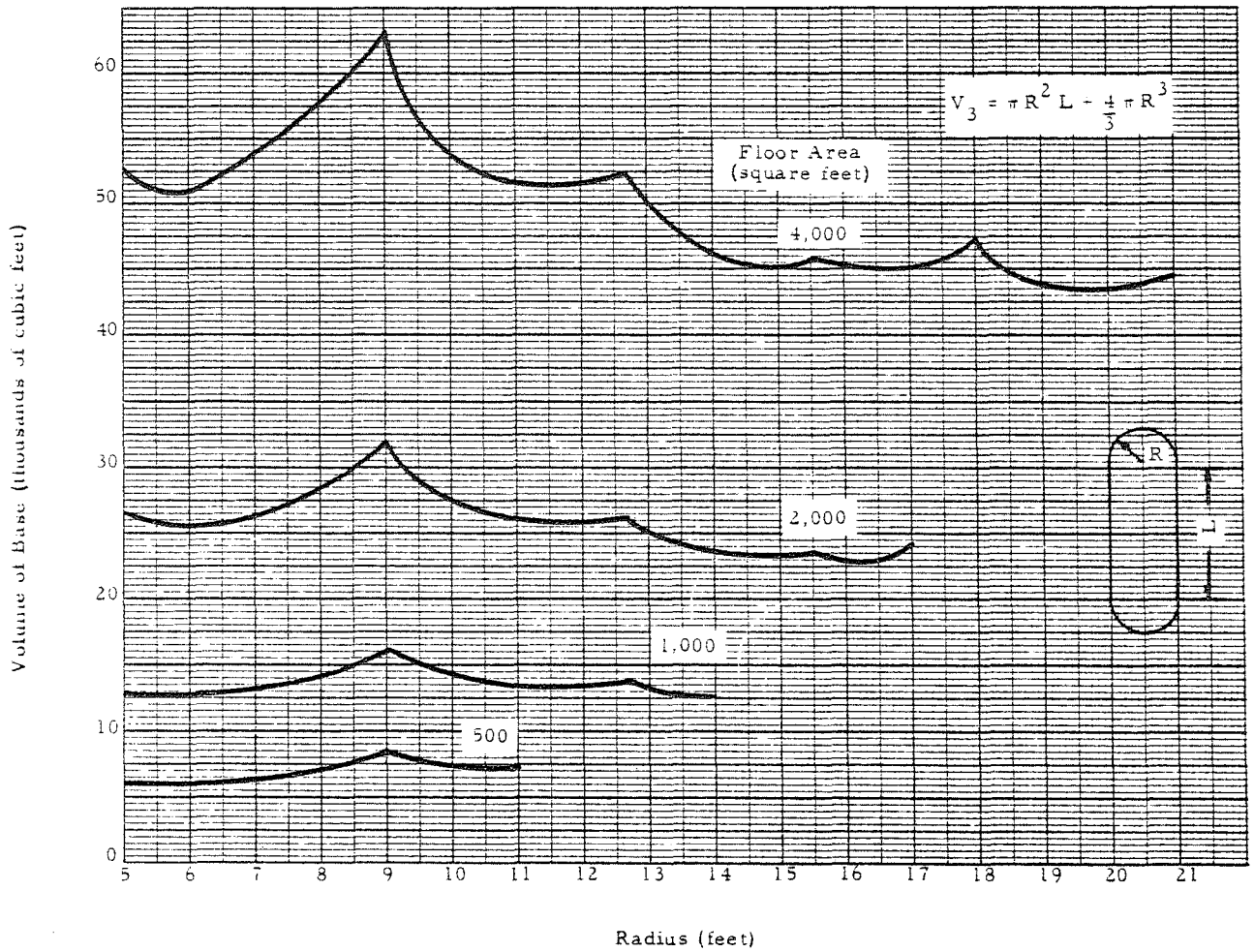

EXHIBIT C14 - VOLUME OF CYLINDRICAL MODULE VERSUS RADIUS

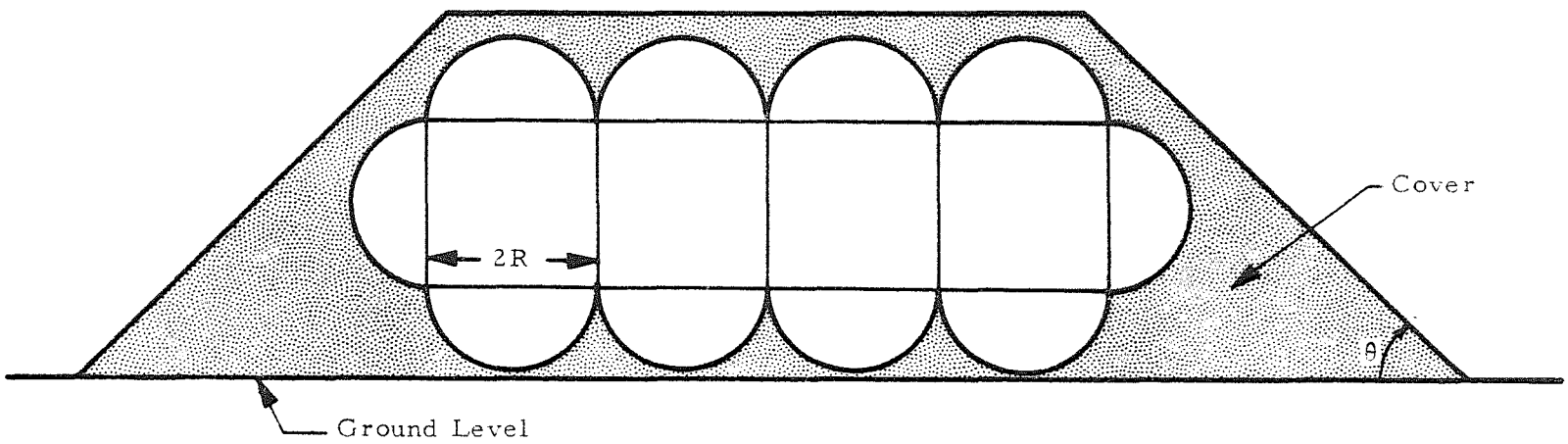

EXHIBIT C15 - STRUCTURE FORMED BY JOINING NUMEROUS HALF-CYLINDERS

shows a structure formed by fastening together a number of cylindrical half sections with structural cross members, forming a large rectangular working area with adequate headroom. This form of construction offers the following advantages.

First, floor space with headroom can be economically constructed from cylinders 8 feet in diameter.

Second, the volume of dirt to cover a base of this shape may be smaller than that for other shapes. For example, to cover 4,000 feet of floor space in two decks with cylinders 8 feet in radius and 25 feet long requires 62,000 cubic feet of loose material. This compares with 116,000 cubic feet to cover a cylindrical structure of equivalent floor area with 8-foot radius.

6. Modular Shapes: Influence of Shielding Requirements

The lunar surface is bombarded by solar and cosmic protons, electrons, heavy particles, X-rays, gamma rays, and meteors, and is subjected to wide thermal changes. One important goal in constructing a lunar base will be to provide protection from these hazards. This section compares the logistics cost for shielding against meteors and radiation for spherical and cylindrical modules of varying dimensions. Several methods of shielding are considered:

a. Shielding materials transported from the earth (i.e., prefabricated shelters)

b. Tunneling into lunar mountains

c. Covering surface installations with lunar rocks and dust

d. Burying shelter modules in trenches blasted out of the lunar surface (which also reduces the chance of explosive decompression)

Some of the influences of lunar surface conditions on the choice of module shape and size are discussed below.

Solar flares present the most difficult problems in radiation, from the point of view of shielding. Protection from solar flares requires a far greater mass of shielding than for any of the other hazards.

There is some speculation that the damaging radiation in these solar flares more or less follows a straight line. If the base is located in the shadow of a large mountain, the radiation reaching the base from the solar flares may be quite small. If this proves to be true, it may be advantageous to locate the base in some area that is permanently in shadow. Craters near the north and south pole are known to possess regions that are permanently in shadow. These may be suitable locations for a base.

The shielding requirements for a base located in the bottom of such a crater may be quite modest, and it may be practical to consider bringing all of the shielding mass from the earth's surface. In this case the mass of shielding is proportionate to the total surface area of the module. The weight w_A of the surface area of a cylindrical base with hemispherical ends is given by the formula

$$w_A = \sigma S = \sigma(2\pi RL + 4\pi R^2)$$

where S equals the surface area, σ the surface density, R the radius of the cylinder, and L the length of the cylindrical portion.

Exhibit C16 shows a plot of the total surface weight as a function of cylinder radius for modules of varying floor areas, with walls fabricated of honeycomb structures weighing 3.75 pounds per square foot. The smallest surface area is represented by the limiting case in which the cylindrical part becomes zero length and the cylindrical base reduces to a sphere. A spherical base gives the most floor area for a fixed mass of surface material--a conclusion that is not surprising.

7. Protection of Surface Installations

Instead of tunneling into lunar mountains it may be desirable to place the base modules upon the surface of the moon and cover them with loose material. If the lunar surface is covered with an abundance of debris, this may provide an economical means of constructing a base

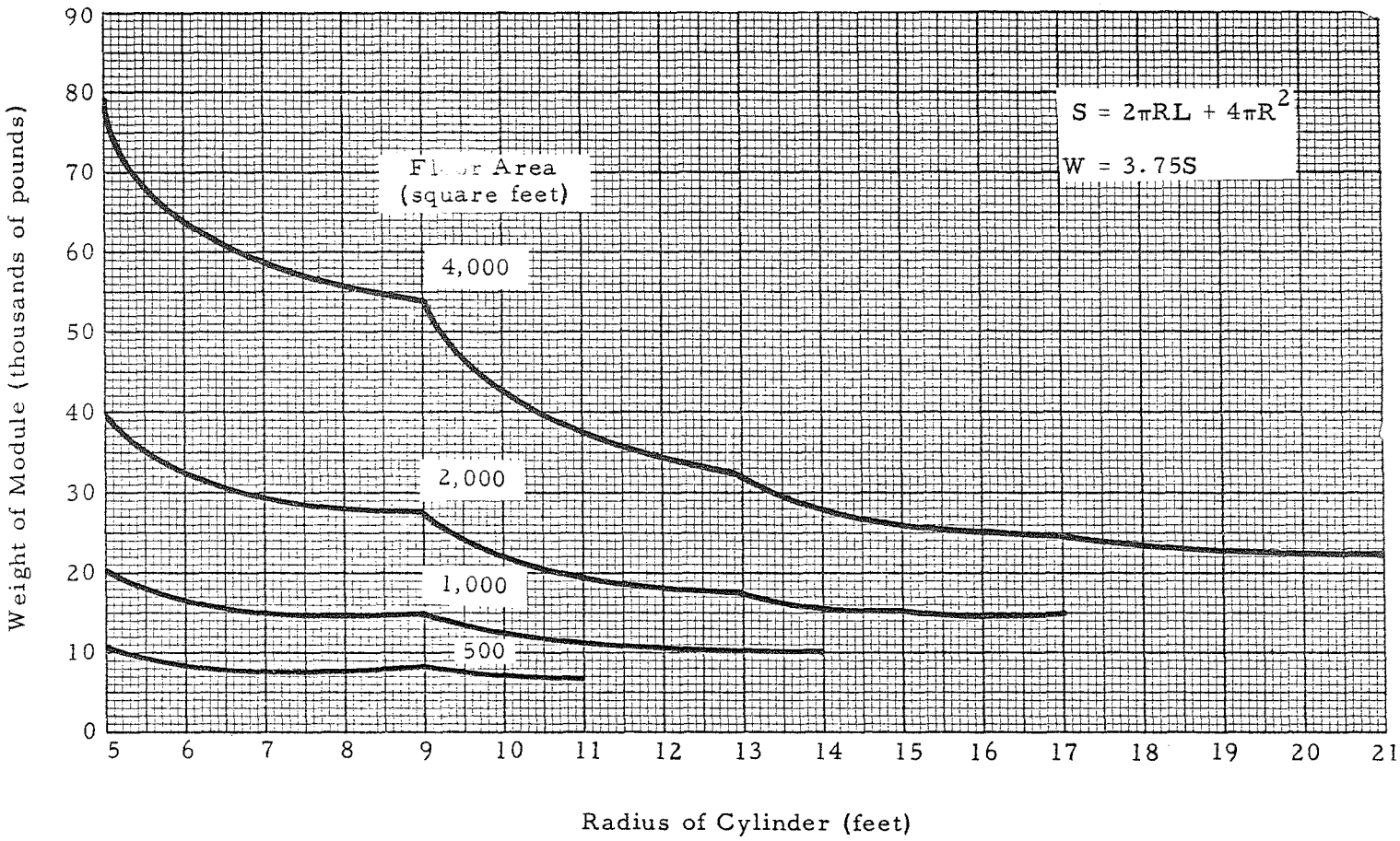

EXHIBIT C16 - WEIGHT OF CYLINDRICAL MODULE WITH SPHERICAL ENDS

with protection from radiation. Exhibit C17 shows the side and cross section views of such a base under a protective shield of material. From geometry, the height, h, the width, w, and the volume V, of the pile of rock are given by the formulas

$$h = \frac{R(1 + \cos\theta) + T}{\cos\theta} = 2.155\,R + 1.155\,T$$

$$w = \frac{R(1 + \cos\theta) + T}{\sin\theta} = 3.732\,R + 2\,T$$

$$V_S = whL + \frac{\pi}{3} w^2 h - \pi R^2 L - \frac{4\pi}{3} R^3$$

where T = minimum thickness of shielding
θ = angle of response
R = radius of cylinder
L = length of cylinder

Exhibit C18 contains a graph of the mass of material that must be gathered to cover the cylinder as a function of its radius, again with varying floor areas defined as before. These curves have been computed with the thickness of shielding T equal to 0 as representing the limiting case. Any practical situation would require some more material than this. The angle of repose θ is assumed to be 30°; the length of the cylinder L may be obtained from the equation in Exhibit C18.

8. Tunneling Into a Lunar Mountain

Tunnels may provide secure facilities sheltered from solar flares and cosmic radiation. If areas can be found on the lunar surface that are suitable for tunneling, this technique may provide economical and secure bases. The tunnels can be dug in a generally uphill direction, so that the spoil can be loaded onto trucks or vehicles and roll downhill

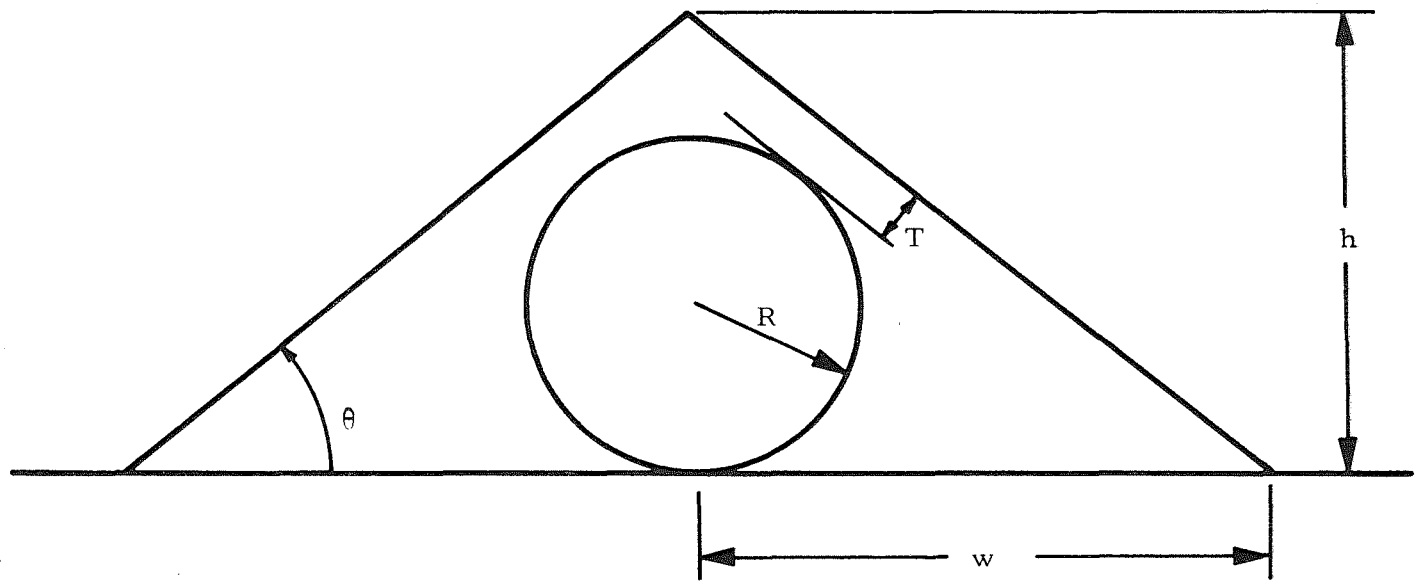

EXHIBIT C17 - CROSS SECTION OF CYLINDER BURIED UNDER LOOSE MATERIAL

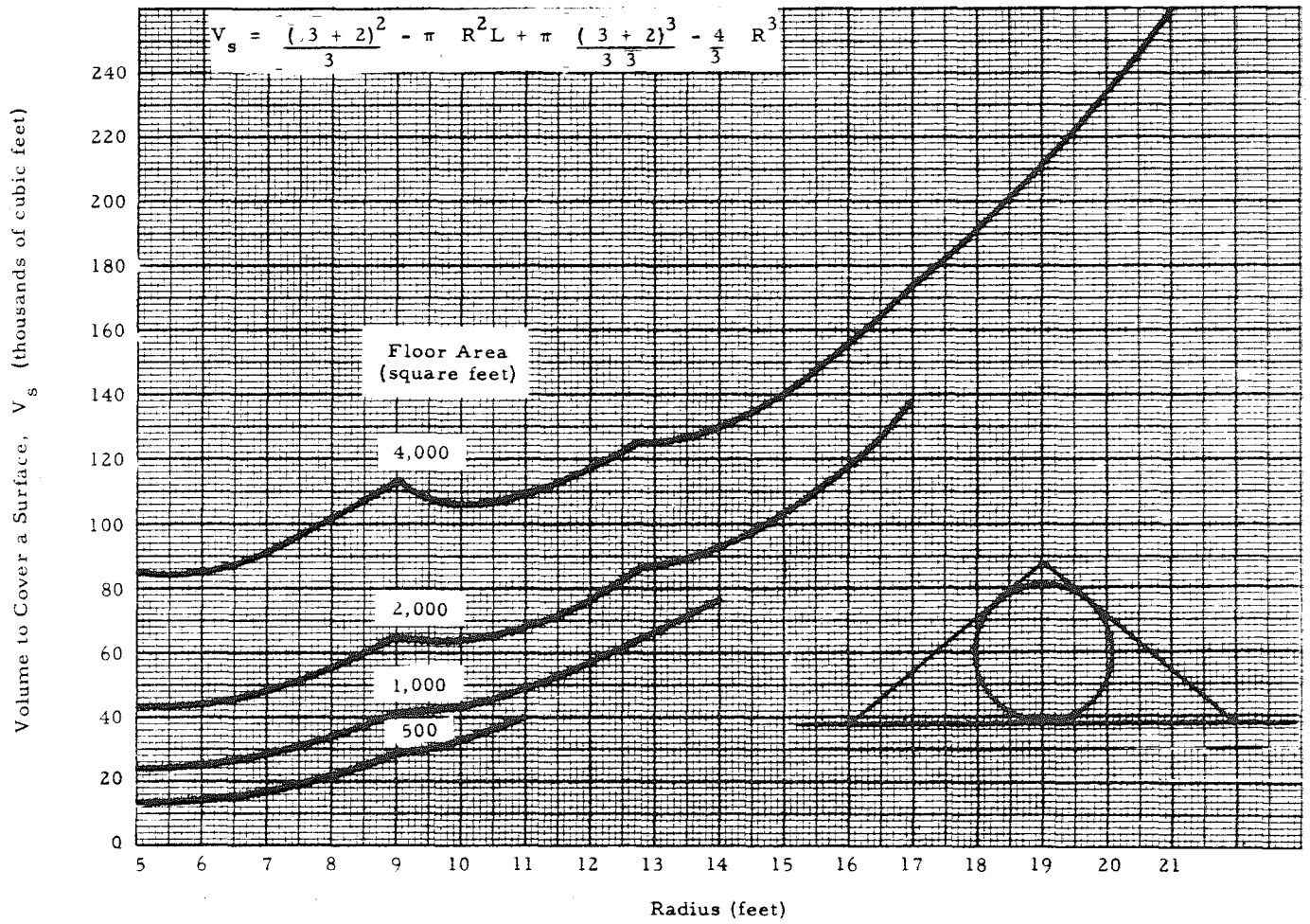

EXHIBIT C18 - MASS OF MATERIAL FOR COVERING

to the exit. A principal advantage of the tunnel is that it soon provides a protected area in which to work. The volume of rock V that must be removed from the mountain is given by the formula

$$V_T = \pi R^2 L$$

where L is the length of the multistory cylindrical facility.[1]

Exhibit C19 contains a plot of the volume of multistory facilities as a function of the radius. As in previous studies, four different floor areas are examined, while the headroom of 8 feet is held constant.

Tunneling into rock requires the expenditure of one-fourth to one pound of explosive per cubic foot of material removed. Thus, a substantial amount of weight of explosive must be transported to the lunar surface to blast such tunnels.

9. Burying of Modules in Trenches

If there is little lunar debris readily available it may be necessary to blast the surface material to obtain the loose rock. One important technique would be to blast a trench into the hard lunar surface and roll the cylindrical modules into the trench and then cover with the debris.

For many years the manufacturers of explosives and a number of state experimental stations have experimented with various types and strengths of explosives in an effort to determine the base type to use for blasting ditches. Through actual practice and years of experimental work, any quick-acting dynamite is recommended for this task.

Depending on the nature of the soil, density, and water content, either a ditching dynamite or some grade of straight nitroglycerin (50 to 60 percent) should be used.

In dry soil the use of an ammonium nitrate ditching type of dynamite, detonated electrically, is recommended. For moist soil, the propagated

[1] In contrast to a module, the tunnel is assumed to have plain instead of hemispherical ends.

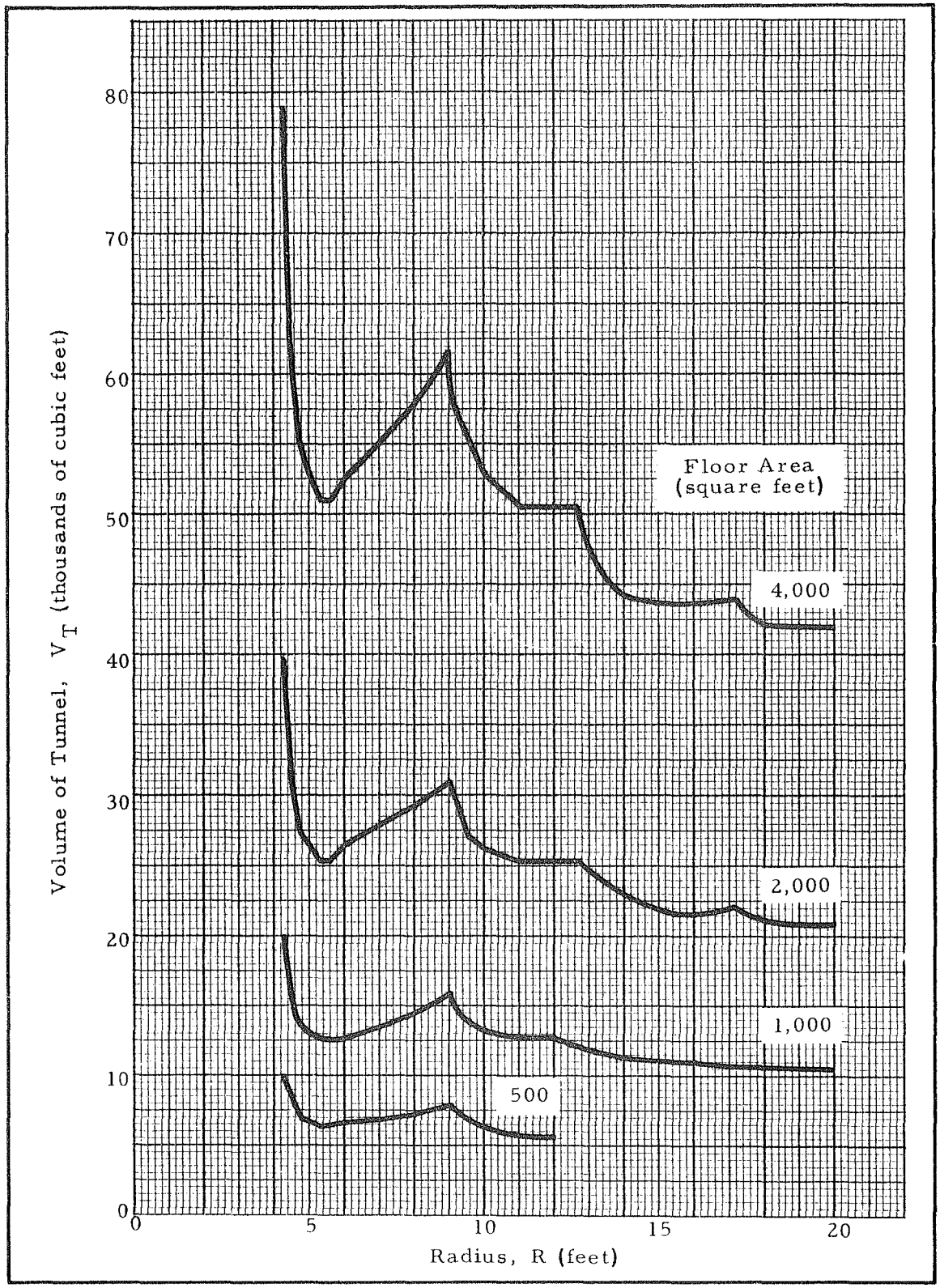

EXHIBIT C19 - VOLUME OF TUNNEL

method of blasting a ditch can be used, wherein only one charge of dynamite is primed with a blasting cup. When this is detonated, the shock wave generated by the explosion is carried to adjoining charges.

On the premise that the lunar surface structure is basically a basalt rock covered with a layer of varying thicknesses of dust, it is apparent that ditching with explosives would be conducted by simultaneous electrical detonation of each charge.

Although the method is not new, having been introduced by Linde in 1895, a liquid oxygen explosive, "LOX," comprising activated carbon and liquid oxygen has been found to be very effective and is used commercially to a considerable extent (i.e., though not as convenient as dynamite). Some basic disadvantages to the use of LOX on earth would not be present in the lunar environment. This refers specifically to the high rate of evaporation of liquid oxygen in the earth's temperate environment, whereas on the moon, in the shadow or during the lunar night, surface temperatures are of the order of -250° F (i.e., close to the temperature of liquid oxygen, -297° F at sea level pressure). The favorable environmental temperature should compensate for the vacuum condition of the lunar atmosphere; i.e., without an atmosphere, "heat" gain by the liquid oxygen is negligible.

A most important consideration favoring the use of a LOX explosive is that of logistics. Liquid oxygen will be one of the most important commodities transported to a manned lunar colony, and to a lesser degree, activated charcoal, for use in the purification of the atmosphere in the life support system. With both of these ingredients on base and periodically resupplied, it would appear that the combination of these two elements into an explosive mixture can be performed at the site.

If special techniques are called for, these should be recognized and perfected (on earth) for later application to the lunar environment.

Ditches up to 18 feet deep and 45 feet wide have been blasted with explosive techniques. Holes, spaced from 4 to 8 feet apart can be arranged in rows to yield the necessary width; the quantity of explosives to be placed in each hold and their depth is determined from the cubic yardage of material to be removed. Assuming little difference in the

behavior of these explosives in the lunar environment from that on earth, with the weight of explosives dependent only upon the nature or structure of the soil, one may estimate that a pound of high explosive will be required to "remove" one cubic yard of rock or well-packed soil. Techniques for blasting a deep ditch are shown in the sketch of Exhibit C20, in which a multiple row of explosives is detonated in rapid sequence.

Exhibit C21 shows the cross section of a trench dug into the lunar surface; and Exhibit C22 shows the cylindrical base buried under the overburden. The symbols indicate the following in the figures and text:

V_1	is the total volume per unit length of the trench
V_2	is the volume per unit length enclosed by the inclined overburden material
V_3	is the cylinder volume per unit length
A_3	is the cross section area of the cylinder
d	is the depth of the trench
C	is the width of the base
θ	is the angle of repose of the rock fill
ϕ	is the angle of the trench walls (and to be a total with the overburden)
h	is the height of the overburden
2w	is the width of the overburden
2v	is the width of the trench

Since the mass for the overburden must come from the trench, one can write (if the length is large compared to R)

$$V_1 = V_1 + V_2 - V_3 \qquad L > R$$

or

$$V_2 = V_3$$

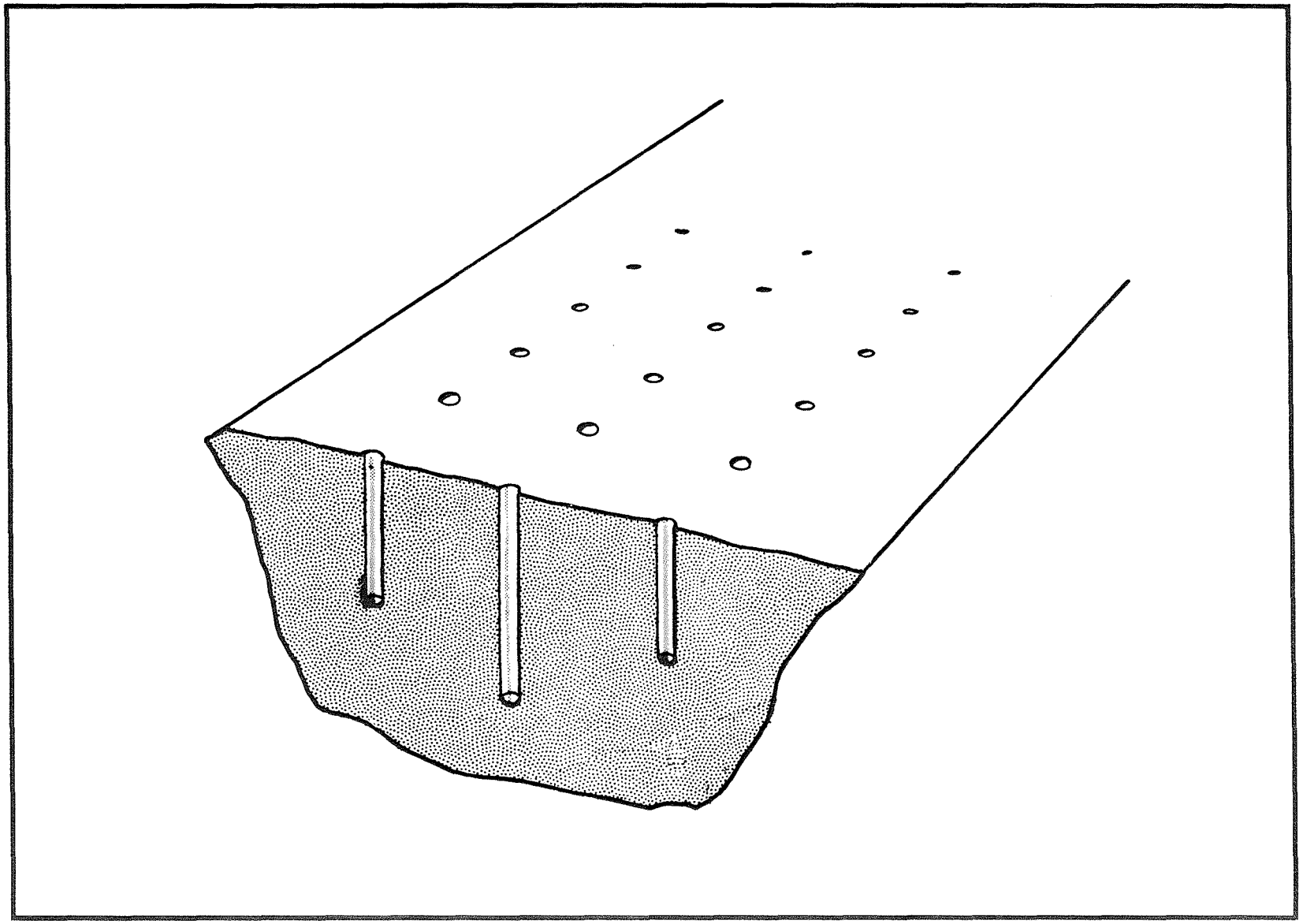

EXHIBIT C20 - DITCHING WITH EXPLOSIVES

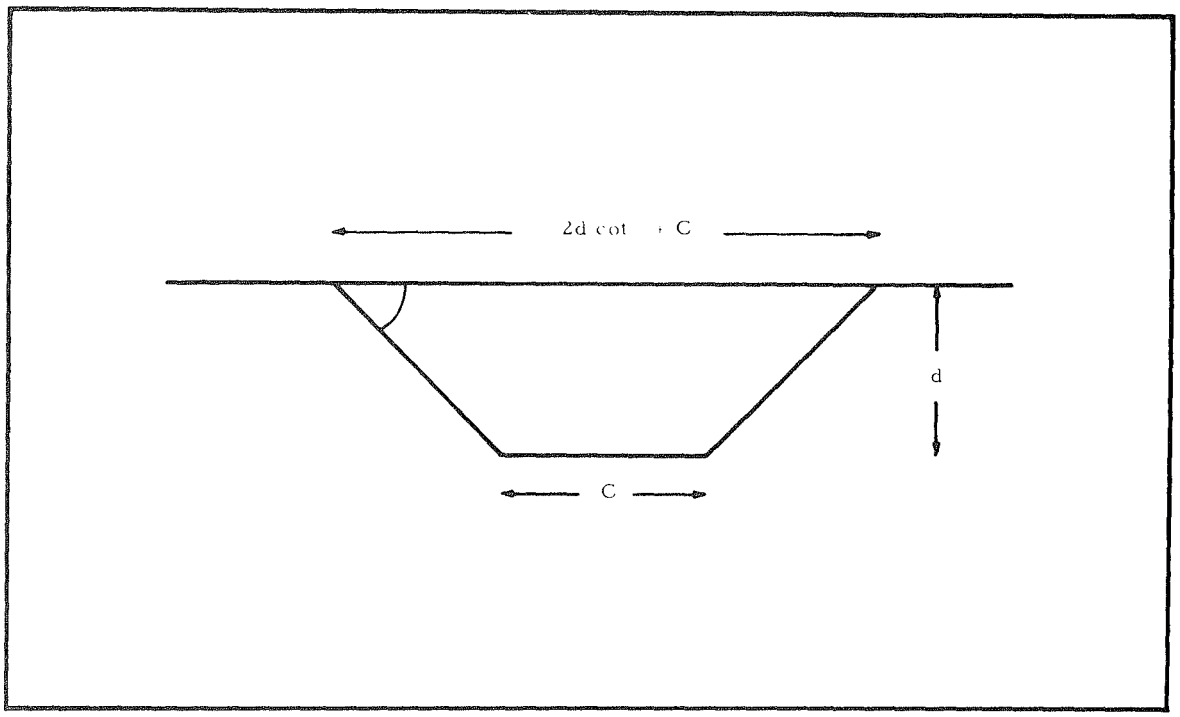

EXHIBIT C21 - CROSS SECTION OF TRENCH

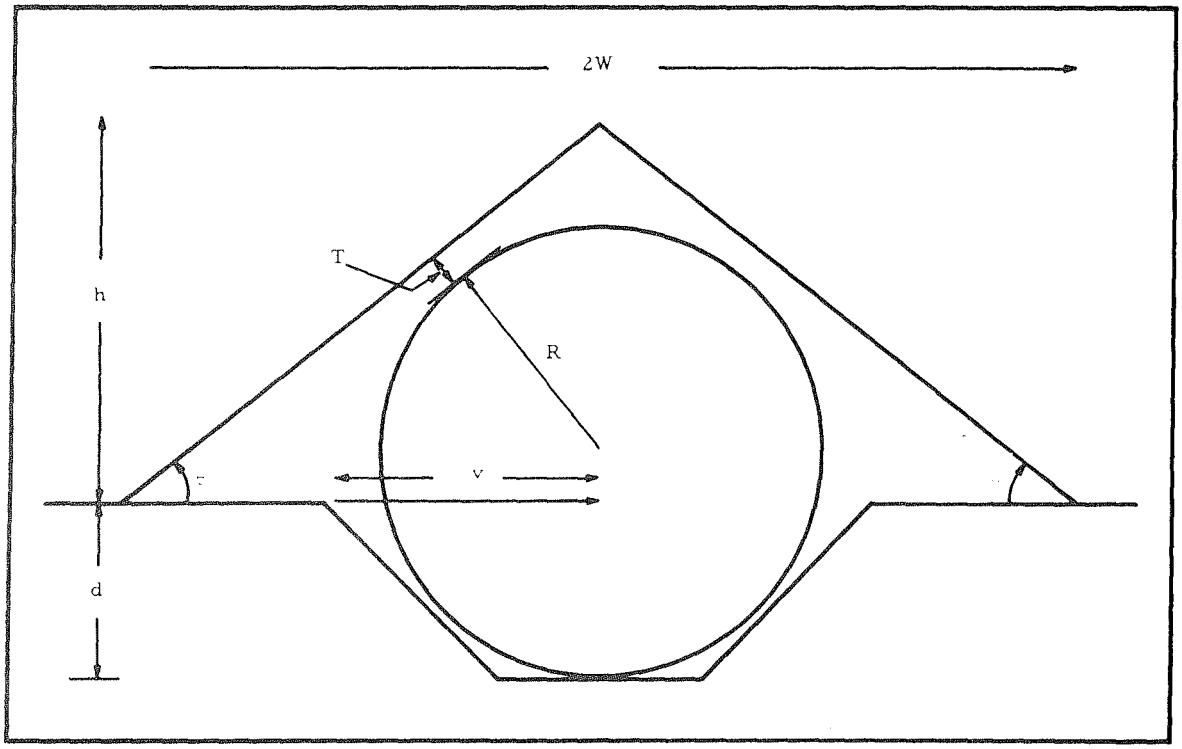

EXHIBIT C22 - CROSS SECTION OF TRENCH WITH CYLINDER AND OVERBURDEN

Now V_2 and V_3 are given by the expressions

$$V_2 = wh = h^2 \cot \theta$$

$$V_3 = \pi R^2$$

Therefore,

$$h = (\pi \tan \theta)^{1/2} R \qquad L > R$$

$$w = (\pi \cot \theta)^{1/2} R \qquad L > R$$

and the distance from the bottom of the trench to the top of the fill is:

$$d + h = R + \frac{R + T}{\cos \theta}$$

where T is the shielding thickness and d the depth of the trench.

Solving for d, one finds

$$d = R\left[1 + \frac{1}{\cos \theta} \cdot (\pi \tan \theta)^{1/2}\right] + \frac{T}{\cos \theta}$$

From geometry we have

$$C = \frac{2(1 - \cos \varphi)R}{2\varphi}$$

The volume of rock that must be removed in the trench per unit length, V_1, calculated by assuming the trench to be a trapezoidal cross section, is shown to be

$$V_1 = \frac{(d)\ (2d \cot \varphi + 1C)}{2} = d^2 \cot \varphi + RD \left(\frac{1 - \cos \varphi}{\sin \varphi} \right)$$

In this derivation it has been assumed that the density of mass in the overburden is compacted so as to equal that of the undisturbed lunar surface. This assumption produces only small errors.

The angle of repose of rock on the lunar surface θ is estimated at about 30° and the angle of rock walls of the blasted channels φ at 45°. Substituting these numerical data in the above equations yields the following values for some of the principal geometric parameters:

$$h = 1.342\ R$$

$$w = 2.33\ R$$

$$v = 1.224\ R$$

$$C = 0.828\ R$$

$$d = 0.813\ R + 1.152\ T$$

$$V_1 = d^2 + 0.414\ Rd = (0.81\ R + 1.15\ T)\ (1.22\ R + 1.15\ T)$$

$$V_u = V - \pi R^2 L - \frac{4}{3} \pi R^3$$

where V_1 is the volume per unit length and V_u the total volume of the trench. If L is small, these equations underestimate the amount of dirt to be moved.

Exhibit C23 contains a plot of the depth of the trench as a function of the radius of the cylinder for several values of the thickness of the overburden, T. Exhibit C24 contains a plot of V_u, a measure of the volume of the rock that must be removed per unit length (again as a function of the radius of the cylinder).

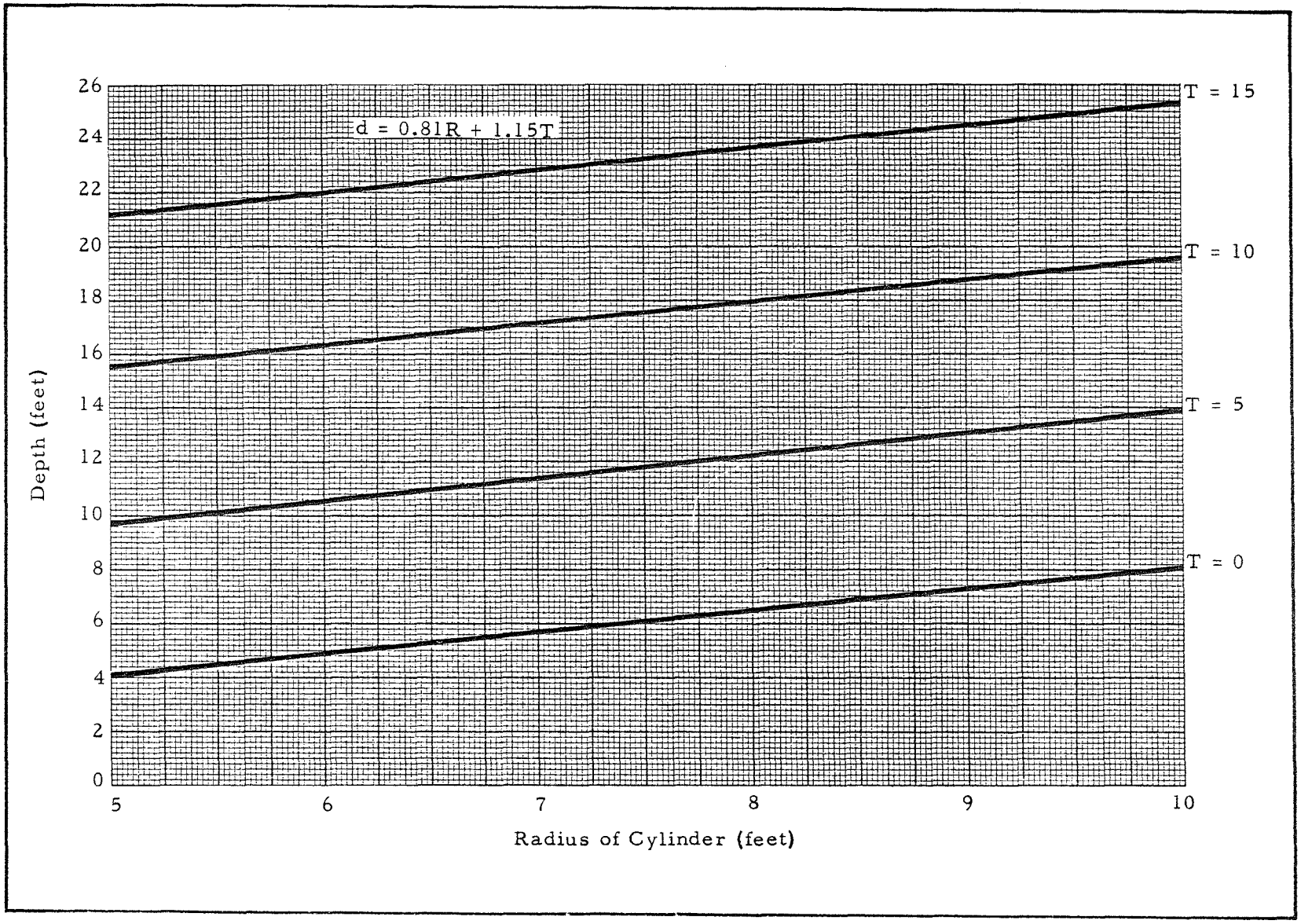

EXHIBIT C23 - DEPTH OF TRENCH

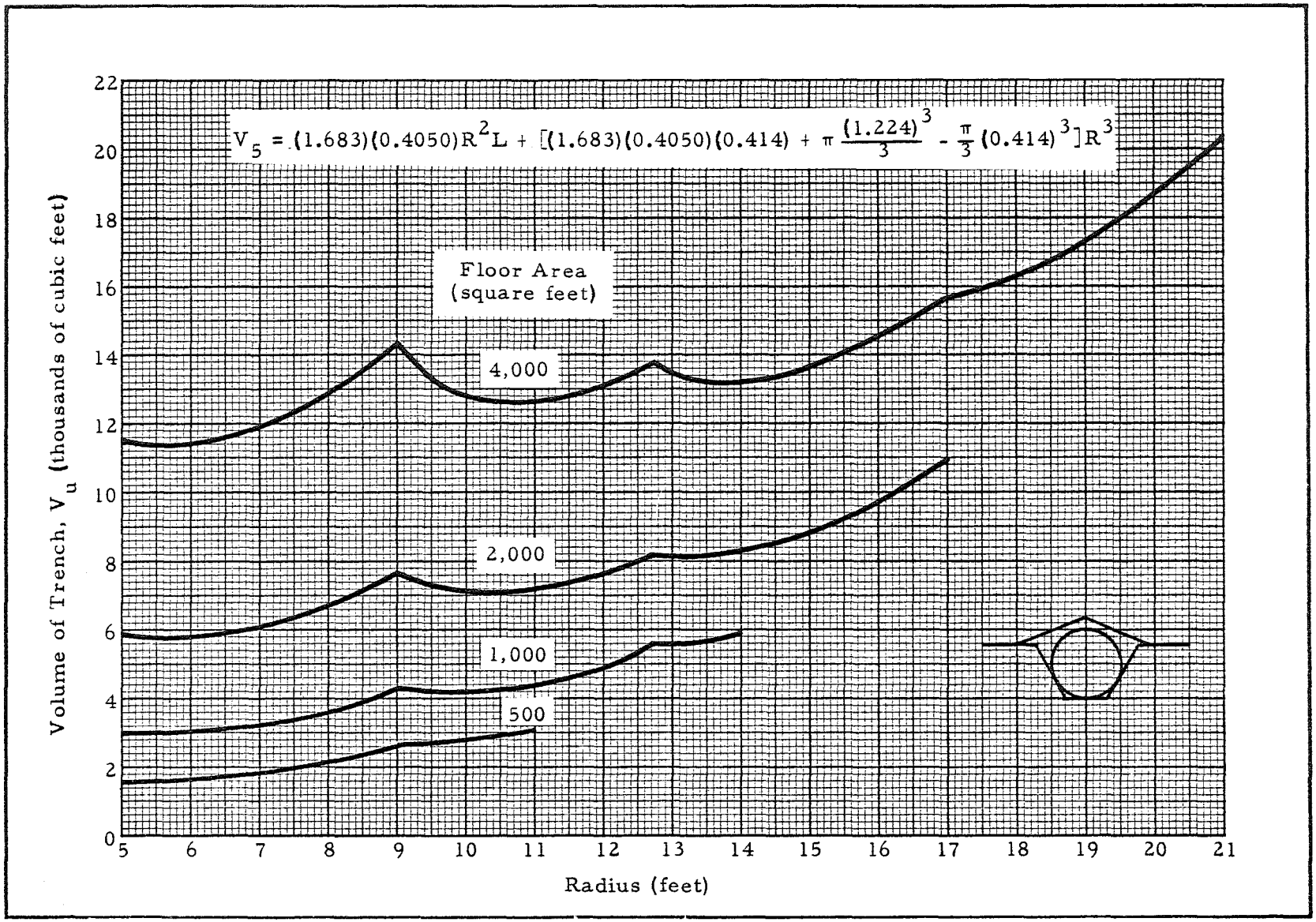

EXHIBIT C24 - VOLUME OF ROCK REMOVED PER UNIT LENGTH OF CYLINDER

10. Power Requirements (Preliminary Estimates)

The power requirements may be grouped into the following areas:

a. Life support systems

b. Mobile equipment

c. Communications

d. Scientific experiments, exploitation of lunar resources, base maintenance and repair

Presented below is a breakdown into subcategories and estimates of the requirements.

a. Life Support Systems

These provide a livable atmosphere, water, illumination, and temperature control. The gaseous atmosphere is maintained by the addition of oxygen and the absorption of carbon dioxide and other undesirable constituents. Circulation of the air supply and deletion of the undesirable constituents are expected to take modest amounts of power; however, regeneration of oxygen from either carbon dioxide or water will make appreciable power demands.

In Reference 6, the weight of chemical-electrolysis systems is reported to be about 70 kilograms per man, requiring an electrical input of about 1.25 kilowatts. Reference 7 gives water requirements per man-day as 8 pounds for drinking and an estimated 3 pounds for washing. A water reclamation system with a capacity of 10 pounds of water for an 8-hour period at a cost of approximately 100 watt-hours per pound has been demonstrated in a flight prototype model, per Reference 8. Assuming this same efficiency, water reclamation would require a power output of 46 watts per man.

Food preparation is expected to take approximately a half kilowatt. If any food growth is to be considered, power requirements may become appreciable. A U.S. Air Force report, quoted in Reference 9, indicates that the 10 horsepower of heat per man will have to be dissipated from the light sources used in the photosynthesis process of food production. The same reference indicates that engineering problems would preclude

the use of natural sunlight for this photosynthesis. It appears that a considerably more sophisticated lunar base is required before a completely closed ecological system can be seriously considered.

Interior illumination required for the base would depend upon spatial relationships; however, a value of 160 watts per man is not unreasonable. Exterior area illumination would be expected to require at least several kilowatts for a reasonable coverage during construction, particularly if large holes were being excavated for placement of modules underground.

During consideration of the lighting requirements for base construction and later operations within the base site, some interesting data were noted on the availability and intensity of earth light during the lunar night. If one postulates that the base would be on the side of the moon that always faces the earth, then the geometry of the earth-sun-moon system shows that the side of the moon facing the earth will always be illuminated either by the sun, the earth, or a combination of both.

This illumination by earth light is of more than academic interest. Moonlight has an intensity of approximately 0.02 foot-candles. Examination of the relative reflecting areas and albedos shows that earth light could reach an intensity approximately 100 times greater, or 2 foot-candles, at a "full-earth" position. This should be sufficient for gross illumination during construction tasks such as clearing rubble out of ditches into which modules are to be placed. At "half-earth" the illumination of one foot-candle should still be sufficient considering that a reasonable amount of visibility is obtained under full moonlight on earth. In addition, at least some color discrimination should still be possible, mostly in the green and yellow wavelengths. Minimum lighting would occur right after sunset and before sunrise when the earth would be seen as half illuminated; during the lunar night the earth would increase to full and decrease to half phase. There would not be less than a "half-earth" visible from the side of the moon facing the earth.

The significance of this analysis is that area illumination should not be required during construction; local lighting from the vehicle should suffice. If extensive excavation and/or exterior construction is contemplated, the base location criteria may be influenced by a desire to be near

the sub-earth point to obtain maximum intensity and, if deep holes are being dug, by vertical direction of earth light.

Temperature control is a necessity for both personnel and equipment. Power requirements would be very high if the base were exposed to the large temperature extremes on the lunar surface. However, it is almost certain that the base would be largely buried for protection against meteorites and radiation from cosmic and solar sources. The subsurface temperature is not known, but estimates give approximate values of -30° C. Passive temperatures in each module would depend upon the heat generated within that module and the rate of heat diffusion through the surrounding material.

Once these values are better known, from subsurface exploration of the moon, these heat flows may be closely matched through control of thermal conductance. Because the thermal conductance will not be known precisely, and the heat generated will vary with time, some active heat control will be necessary. For power supply planning purposes, base temperature control is considered to require several kilowatts.

b. Mobile Equipment

The lunar surface vehicles are assumed to be used for base construction as well as for exploration trips. These vehicles are considered to consist of a tractor, with a peak output of 50 kilowatts, and a trailer with life support equipment. During base construction the tractor is expected to use an average of 50 horsepower; with two tractors in operation at all times the total average power is 100 horsepower or 75 kilowatts. During exploration trips, the average power is expected to be of the order of 20 horsepower or 15 kilowatts each for the two in use. The trailer is expected in both cases to take 3 kilowatts or a total of 6 kilowatts. It can be seen that the total of 81 kilowatts during base construction is by far the larger load.

At a fuel consumption of 1 pound per kilowatt hour for fuel cells, approximately 80 pounds of oxygen and hydrogen would have to be provided to the vehicle tanks per hour of operation. This fuel would probably be stored in the pre-positioned cargo carriers and be of sufficient quantity

to provide power until the nuclear powerplant is operating. At this time, electrolysis of the water byproduct of the fuel cells would be accomplished at the main base and the vehicles resupplied with oxygen and hydrogen.

If the fuel cell efficiency is 70 percent, approximately 115 kilowatts of power would be required for theoretical electrolysis of the water to hydrogen and oxygen. Additional large quantities of power would be necessary to transform the electrolyzed hydrogen and oxygen at base ambient temperature and pressure to a liquid state for storing in the vehicle tanks. This power may be similar in magnitude to that required to electrolyze the water. For purposes of base power planning, the total power requirement to supply the vehicles with hydrogen and oxygen in the liquid state is estimated to be 200-250 kilowatts.

c. Communications

There is expected to be a need for several voice channels at less than one watt apiece, plus additional channels to send telemetered data which would also have low power requirements. Even if television transmission were deemed desirable, it probably would not exceed one kilowatt. No need is seen for tracking radar; low-power beacons should be sufficient to guide incoming vehicles. During exploration trips it may be necessary to have radio relays because of the lack of atmospheric scattering and the sharp curvature of the moon. These relays could be radioisotope powered if it were intended to leave them in position, or have rechargeable batteries if the intention were to pick them up on return to base. There would be a small power requirement in the latter case. Total communication power requirements are estimated as being less than 2 kilowatts.

d. Maintenance and Experimentation

Base construction is not expected to require appreciable amounts of power other than in the mobile vehicles because of the difficulty of using this power with expected mobility available from space suits. From the philosophy mentioned above of conserving manpower, it is expected that maintenance and repair will be primarily on a plug-in

basis rather than requiring appreciable amounts of power. The number and type of scientific experiments are unavailable at this time. A kilowatt of power should be sufficient for most of them, including the use of a computer for analyzing results. Although large quantities of power would be required for any exploitation of lunar resources, such actions are considered to be beyond the scope and era of this study.

e. Summary

It can be seen that the largest power requirements by far are those to regenerate the hydrogen and oxygen for use in the mobile vehicles. Taking the upper estimate of 250 kilowatts for this requirement, and adding all other requirements, results in a power level of 300 kilowatts which should provide a reasonable safety margin. A SNAP-50 nuclear power system is expected to have a power level from 300 to 1,000 kilowatts and to be available in the early 1970's. This could be the primary power source for the base. For reliability purposes it would be desirable to have an alternate source. By this era, the SNAP-8 power system should be well proven. It has a power rating of 30 kilowatts with one conversion system and 60 kilowatts with two. It can supply ample power for the life support requirements of the base with a minimum amount of maintenance. The conversion systems are probably less reliable than the reactor itself; the dual nature of these conversion systems provides an additional amount of reliability.

11. Lunar Smog

Very early in lunar exploration it will be necessary to examine the lunar atmosphere, for it may soon become contaminated with rocket exhaust gases. The amount of contamination can be related to the payload weight landed on the moon. As a rough approximation, we assume that a velocity potential of about 9,600 ft/sec will be required to soft-land a vehicle on the lunar surface. In decelerating, the rocket jet will point toward the lunar surface for most of if not all of the touchdown phase. Most of the exhaust gas will impinge upon the surface and be scattered, losing some velocity in this collision. Much of this gas will eventually be captured by the moon; one can estimate the mass of this gas with the aid of the rocket formula:

$$M_p = M_{bo} \left[e^{\frac{V}{I_{sp} g}} - 1 \right]$$

where

M_p = mass of propellant

M_{bo} = burnout mass

V = velocity

I_{sp} = specific impulse

Assuming a velocity potential of about 9,600 ft/sec to soft-land on the moon, and an I_{sp} of about 300, then

$$M_p = M_{bo} \left[1.7 \right]$$

Assume for the moment that all the propellant appears as exhaust gas and is subsequently captured by the moon; since the area A of the moon's surface is

$$A = 4\pi \, (1.74 \times 10^8)^2 = 3.8 \times 10^{17} \text{ cm}^2 = 0.6 \times 10^{17} \text{ in}^2$$

and since the lunar atmosphere exerts a pressure less than 10^{-13} kg/cm^2, the entire atmosphere is less than 3.8×10^4 kg (70,000 lbs). The partial pressure exerted by the exhaust gas is then

$$P = \frac{1.7 \; M_{bo}}{0.6 \times 10^{13}} = 3 \times 10^{-17} \; M_{bo} \quad .$$

The atmospheric density in the ionosphere is of the order of 1 gm/cm^3 to 10^{-9} gm/cm^3; this is equivalent to 10^{+17} to 10^8 pounds of propellant expanded in the lunar atmosphere. An artificial atmosphere of this concentration might create an artificial ionosphere and complicate scientific measurements.

The lunar atmosphere is estimated as being less than 10^{-13} ($1.5 + 10^{-12}$ psi). After operations start, the fraction contamination C is given as

$$C = \frac{P}{1.5 \times 10^{-12} + P} = \frac{2 \times 10^{-5} M_{bo}}{1 + 2 \times 10^{-5} M_{bo}} \quad .$$

Referring to Exhibit C25, it will be impossible to land any substantial payload upon the moon without contaminating the lunar atmosphere with exhaust gases. The problem will be compounded by contributions from surface tractors, leakage from the base, refuse, etc.

An important problem arises in connection with these exhaust contaminants, i.e., at what rate will the gases be removed? Several mechanisms have been studied. One of these is diffusion into outer space; Singer (Reference 10) estimates that about half the gas will escape into space. Another mechanism is diffusion over the moon and freezing into solids in selected sheltered areas of the moon. About half the exhaust products will freeze on the surface. The relaxation time is of the order of one day.

In summary, lunar smog will prove a hazard to scientific measurements of the natural constituents of the atmosphere. A lunar ionosphere, if formed from exhaust products, would not persist for periods longer than 10^5 to 10^6 seconds.

12. Selected Astrophysical Characteristics of the Moon

Distance from earth	
Maximum (miles)	253,000
Minimum (miles)	222,000
Mean (miles)	239,000
Mean (kilometers)	384,635
Mass	
In U.S. short tons	8.0×10^{19}
In grams	7.32×10^{25}

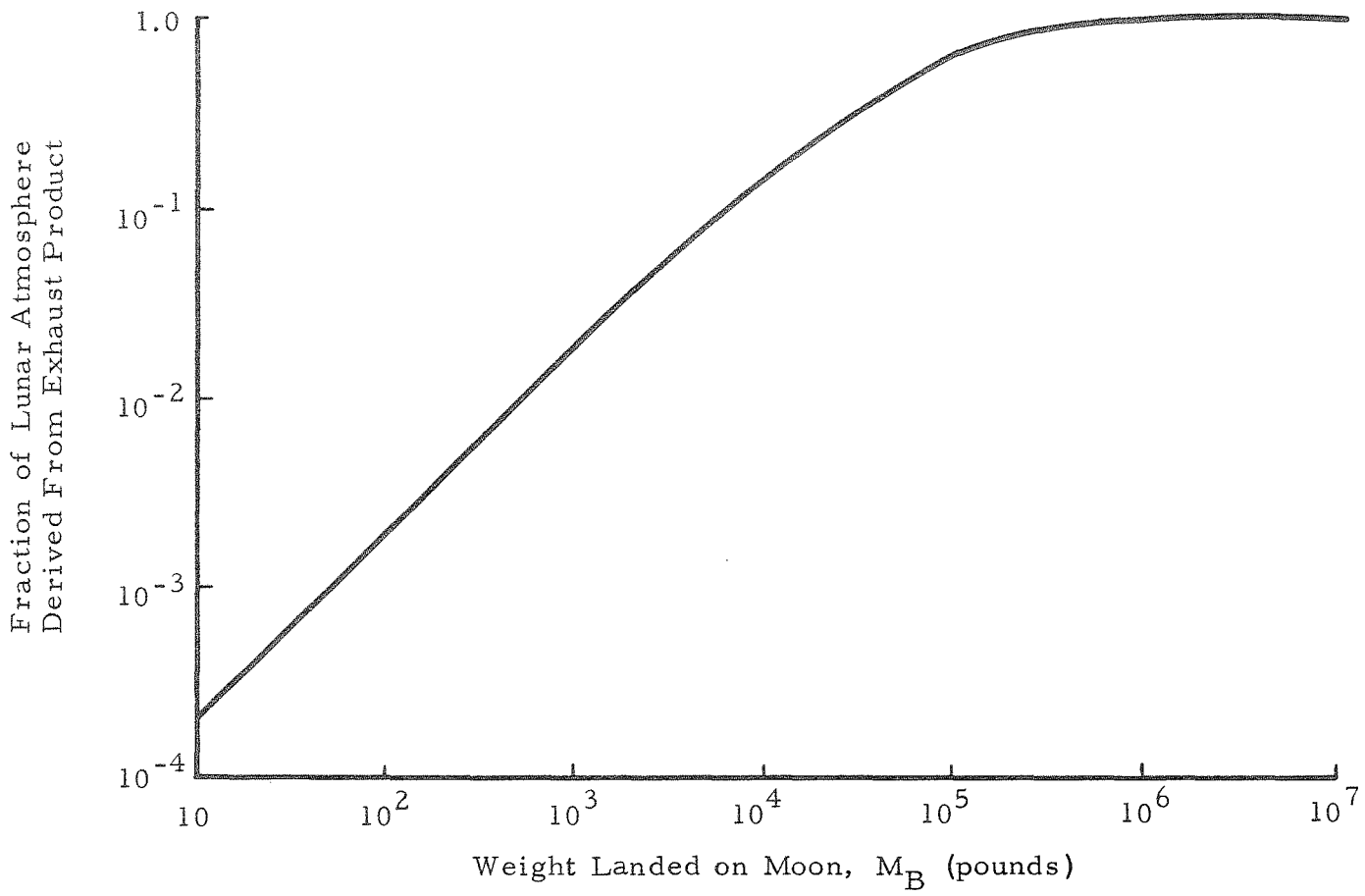

EXHIBIT C25 - CONTAMINATION OF LUNAR ATMOSPHERE BY EXHAUST GASES

In terms of earth's mass	0.01226
In terms of sun's mass	0.0000000368
Density, mean	
In terms of water	3.34
In terms of earth's mean	0.6043
Magnitude	
Mean of full moon	12.5
Diameter	
Miles	2,160
Kilometers	3,476
In terms of earth's mean diameter	0.27227
Mean geocentric, angular	31' 07''
Temperatures	
Sun at zenith	214° F (101° C) to 270° F (132° C)
Night	-270° F (-167° C) to -240° F (-151° C)
Subsurface, constant	-40° F (-40° C) to -22° F (-29° C)
Albedo (average)	0.07
Atmosphere, surface pressure (psi)	10^{-12}
Velocity of escape at surface	
In terms of earth's	0.213
Miles per second	1.48
Kilometers per second	2.38
Feet per second per second acceleration	5.31
Cm per second per second acceleration	162
Librations, maximum	
Geocentric in longitude	7° 54'
Geocentric in latitude	6° 50'
Average length of months (days)	
Synodic	29.530588
Sidereal	27.321661
Draconitic (Nodical)	27.212220

Anomalistic	27.554550
Tropical	27.321582
Regression of nodes	
Period of (years)	18.5995
Annual change	$19^{\circ}.358$
Advance of line of apsides	
Mean period of (years)	8.8503
Anual change	$40^{\circ}.667$
Orbit	
Distance, maximum (miles)	252.710
Minimum (miles)	221.463
Mean (miles)	238.860
Mean (kilometers)	384.409
Parallax, mean	57' 02".54
Inclination of orbit plane to ecliptic, mean	$5^{\circ}08'$ 43"
Inclination of orbit plane to earth's equator	
Maximum	28° 35'
Minimum	18° 9'
Eccentricity, mean	0.0549
Velocity in orbit, mean	
Linear miles per second	0.6353
Angular per hour	33'
Surface gravitation	
In terms of earth's	0.165
Visible surface	
Always visible	41.0%
Sometimes visible	18.0%
Largest visible crater	
Bailly	
Diameter (miles)	183
Diameter (kilometers)	294.5
Largest crater visible in all librations	
Clavius	
Diameter (miles)	146
Diameter (kilometers)	235

Highest visible elevation	
From the floor of Newton to	
a peak on its wall (feet)	29,000
(meters)	8,839
Largest visible valley	
Rheita Valley (miles)	115 x 15
(kilometers)	185 x 24

Temperatures on the lunar surface (see Exhibit C26) have been carefully measured using a telescope equipped with a vacuum thermocouple. The lunar surface cools very quickly, reaching a minimum temperature in 20-30 minutes after the sun stops shining (see Exhibit C27). Some indication of the lunar temperature-time history is shown in the sketch below:

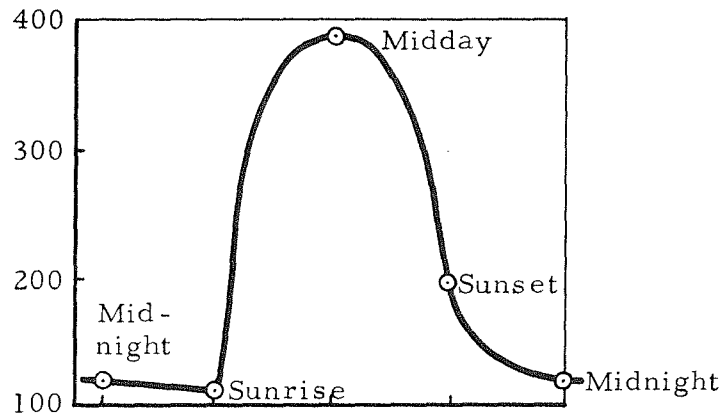

Daytime and nighttime are each about two (earth) weeks long (at the equator) and about six (earth) months long at the poles.

Ultraviolet radiation will be strong enough, because of a lack of a lunar atmosphere, to discolor glass or plastic windows, rendering them useless. Shutters should be employed in lieu of glass, etc.

The moon is continually bombarded by particulate matter: cosmic rays, charged particles, and meteoric particles. It is not possible to define the nature and distribution of meteoric matter accurately enough to estimate it as a potential structural hazard. According to Whipple (Reference 11), extraterrestrial matter exists in three forms:

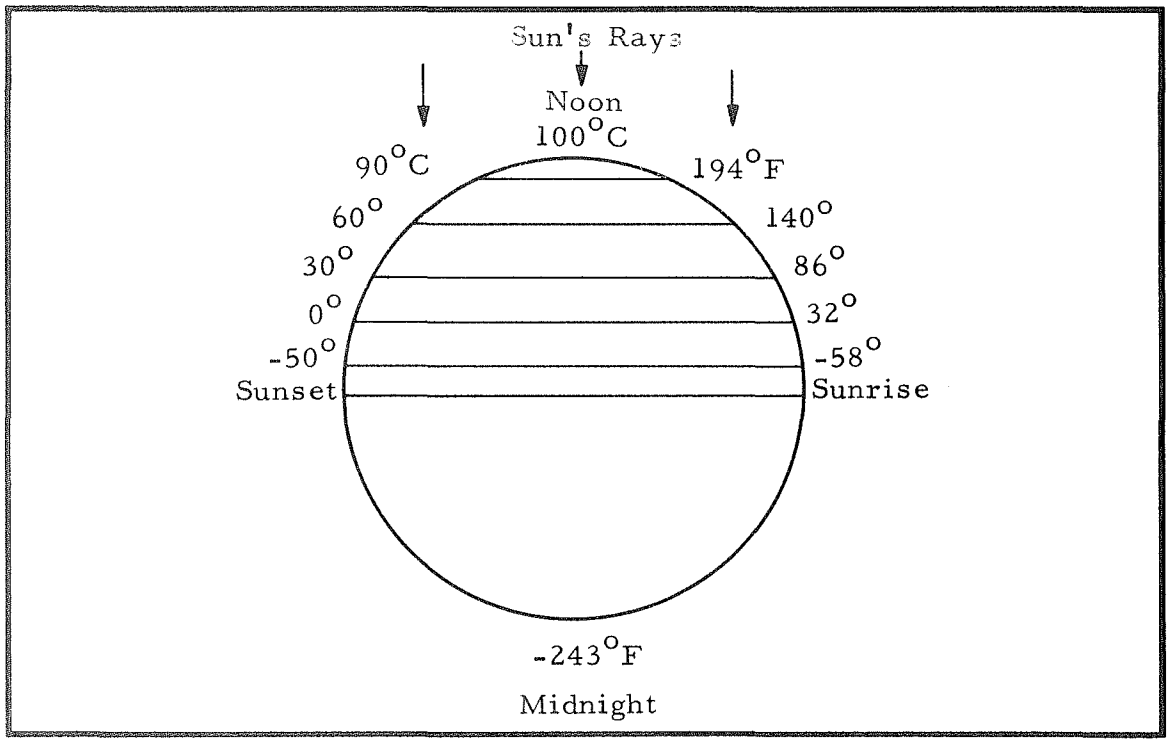

EXHIBIT C26 - TEMPERATURES ON THE MOON

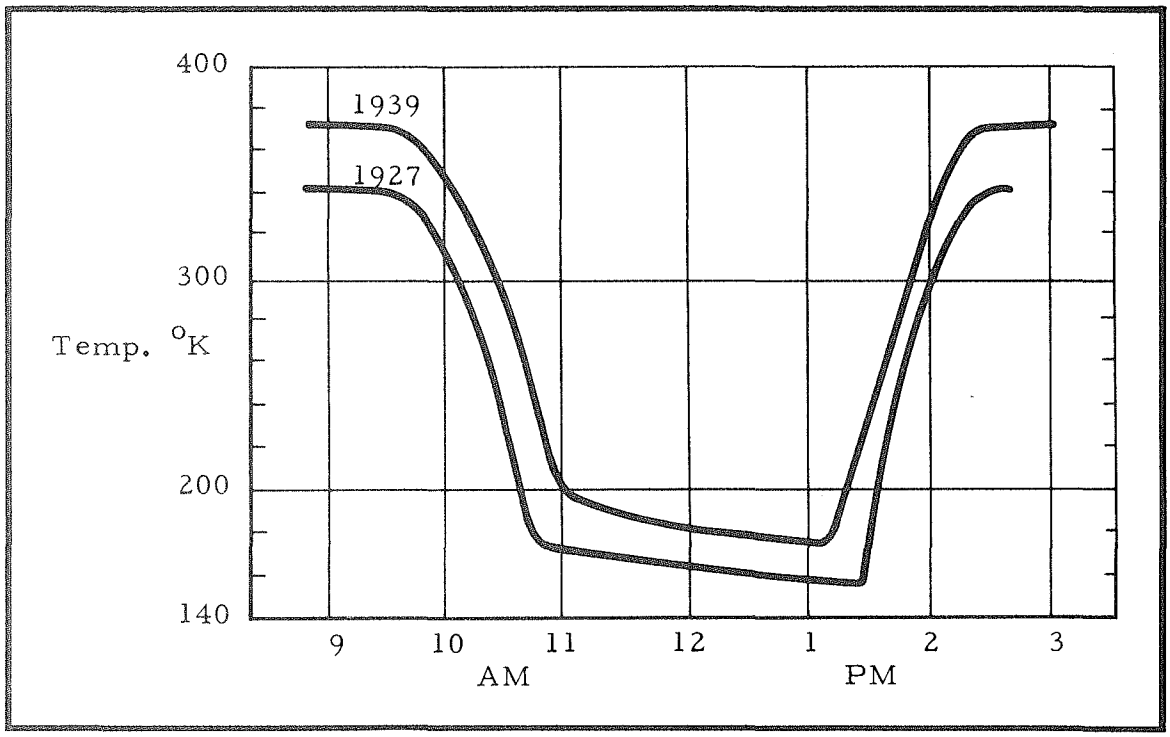

EXHIBIT C27 - VARIATIONS IN T DURING TOTAL LUNAR ECLIPSES OF 1927 AND 1939

(1) interplanetary dust[1] (1 to 300 microns), (2) meteors (fragile, porous bodies of low gross density), and (3) meteorites (solid chunks of iron and stone).

Interplanetary dust is the real hazard, not large meteorites nor meteors. The particles are small, and even though of great velocity, could be deflected by an umbrella-like shield. Best estimates indicate that about three to four particles of diameter 0.0002 to 0.0004 inches would strike each square yard of exposed surface per day.

The moon is approximately 240,000 miles from the earth and rotates around the earth once every 28 days (approximately) as it revolves about its own axis in synchronism.

It is postulated that there is no atmosphere on the moon, no wind, no water, and no sound. And there is no life, as we know it, on the moon's surface.

[1] Abundance of this dust is of the order of 5×10^{-21} g/cm^3 in the vicinity of the moon. Velocities with which these particles may strike the moon range from 1.5 to 44 miles per second.

REFERENCES FOR APPENDIX C

1. Green, J., Geophysics as Applied to Lunar Exploration, Aerospace Laboratories, North American Aviation, Inc., MD 59-272, AFCRL-TR-60-409, 30 June 1960.

2. Hasselmann, D.E., Detonation Test Aerojet Senior Motor Test, Edwards AFB, AFFTC-TR-61-20, April 1961.

3. Kopal, Zdenek, Physics and Astronomy of the Moon, Academic Press, New York and London, 1962.

4. Joos, George, Theoretical Physics, Hafner Publishing Company, Inc. New York, 1934.

5. Giraud, Alain, A Study of Lunar Thermal Emissions, The University of Michigan Research Institute, 03544-1-T, September 1960.

6. De Nike, John, and Stanley Zahn, Aerospace Engineering, v.21, no. 10, October 1962.

7. Mason, John, Man in Space, UCLA Lecture Series on Space Exploration, Fall 1962.

8. Popma, Dan C., "Life Support for Space Stations," Astronautics, v.7, no. 9, September 1962.

9. Hanson, S.W.F., "Some Problems of Spaceflight Feeding," British Interplanetary Society Journal, v.17, no. 9, May-June 1960.

10. Singer, F.S., "Atmosphere Near the Moon," Astronautica Acta, v.7, no. 2-3, pp. 135-140, 1961.

11. Whipple, F.L., "On the Lunar Dust Layer," Vistas in Aeronautics, v. II, Pergamon Press, 1959.

APPENDIX D

LUNAR SURFACE MOBILITY

1. Introduction

This appendix treats several topics believed to be germane to the problem of mobility on the lunar surface. Some topics are treated superficially only, since they are covered elsewhere from a more general point of view and in more depth of specifics. They are included here so that the mobility discussion may have continuity.

The subject of soil mechanics and the kinematic contact interface is first discussed in general terms and then interpreted as to the specific constraints affecting lunar mobility.

A relatively mobile operational concept for the lunar base is developed in order to exercise the vehicular concepts and to focus on the relative advantages and disadvantages of such an approach. The design concepts and criteria developed herein are by no means the result of exhaustive tradeoff iterations and in some cases may not be mutually contiguous. The treatment is sufficient, however, to develop a feel for the design and mechanization problem areas and to revise the total system implications of even the smallest detail. Intuitive engineering will prove to be a very limited tool in the design of lunar equipment, for our intuition is not conditioned for an environment so totally hostile. The cut-and-try techniques of empirical development will also be severely taxed, since lunar environment simulation is inexact, expensive, and of limited availability at this time.

2. Soil Mechanics

a. General

In order to be able to design structures that derive support from the soil as well as vehicles that traverse the surface of the soil, the fundamental characteristics of soil must be understood. Soil is not a homogeneous, isotropic material, nor is it even close to it. It may be assumed to be homogeneous in order to better derive a theoretical or analytical

solution to soil problems. Neither is it an elastic medium, although Hook's Law is often assumed to be valid in order to obtain an analytical solution. For this reason, the behavior of the soil itself must be understood--how it acts under varying load conditions, how its behavior is affected by environmental conditions--as well as the limitations imposed on the soil through disturbance or manipulation.

The three most important characteristics of a soil to the engineer are strength, compressibility, and permeability. Strength is generally defined as a measure of the soil's ability to carry or support a load. An index to the strength of soil is its resistance to shear deformation which is commonly expressed by the Coulomb equation. Coulomb stated that resistance known as friction is proportional to pressure, that cohesion is a measure of the resistance to which a solid body is opposed to rupture into two parts, and that this cohesion is proportional to the area of the section and independent of the normal pressure. The maximum shear stress theory assumes that the material will fail under any combination of stresses when the shear stress exceeds the shear strength of the material.

In a Mohr diagram, which is a commonly used graphical solution to the general case of biaxial stress problems, the Coulomb equation describes the shear strength envelope--a straight line tangent to all possible stress circles.

Another theory of soil strength, that defined by Rankine, states that the material will fail when the normal stress exceeds the shear strength of the soil. This is the maximum stress theory which has only limited application to soil strength problems.

In order to introduce the subject of shearing resistance and shearing strength, it appears pertinent to review the principles of frictional resistance between solid bodies, since shear in soils on a macroscopic basis is similar in many respects to the observed behavior of solid bodies.

Consider the following diagram showing a rectangular solid resting on a horizontal surface.

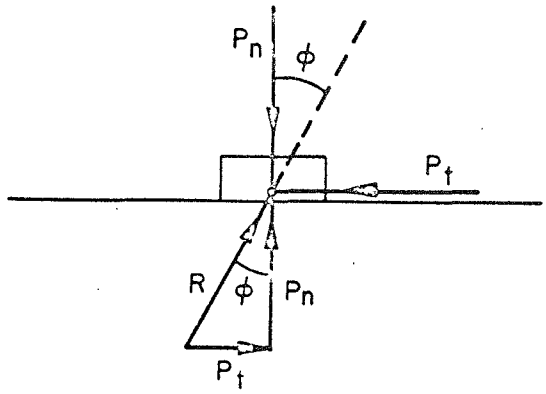

The force P_n represents the total vertical force acting on the body and includes the weight of the body. If a tangential force P_t is applied to the solid, the resultant force R is mobilized to resist the combined vertical and tangential forces. At the instant of impending slip, when the tangential force P_t reaches its maximum, the resultant force R is maximized at a maximum friction angle, ϕ. Thus at failure, or sliding

$$P_t = SA$$

$$P_n = \sigma A$$

where A = area of contact surface

S = shearing stress

σ = normal stress

Relating P_t and P_n, the area is eliminated, and since $P_t = P_n \tan \phi$,

$$S = \sigma \tan \phi$$

The angle ϕ is influenced by surface roughness and absorbed water films. For this reason, coupled with the fact that both sliding and rolling friction are involved, the friction angle in sands is more complex than in solid bodies having no bond or adhesion between them.

Some soils have a finite shear strength even though they may not be subjected to external forces normal to a shear plane. Furthermore, when these soils are subjected to external forces, the shearing strength is increased very little or not at all. Common usage describes these soils as

"cohesive," although modern soils terminology avoids this term. The shear strength component called cohesion or no-load shearing strength is independent of the normal pressure, but is not a true and unique property for any one soil. Neither is the friction angle ϕ. Most natural soils exhibit both friction and cohesion components with the result that the total shear strength is a combination of these properties. Thus for the general case of either moist or dry clay soils above the water table,

$$S = c + \sigma \tan \phi \tag{2}$$

and for clean sands above the water table,

$$S = \sigma \tan \phi \tag{3}$$

For clays with no internal friction component,

$$S = c \tag{4}$$

Exhibit D1 depicts Mohr diagrams for the general case of Equations (2), (3), and (4). It should be noted that perfect tangency of the shear envelope is seldom attained in practice, in which case the envelope is fitted by the least squares method.

Compressibility in a soil can be considered to consist of two fundamental types. The first is the squeezing out of air from a soil mass so as to densify the mass. This is termed compaction, and is typified by the process of compaction of embankments for highway construction, earth dams, and airfield runways.

The second type of compressibility is the squeezing out of water from the soil mass so as to bring the soil particles into more intimate contact. This is termed consolidation. An illustration would be the consolidation of clay beneath a building footing, accompanied by settlement of the building. Diagrammatically, compression in soil resembles the following:

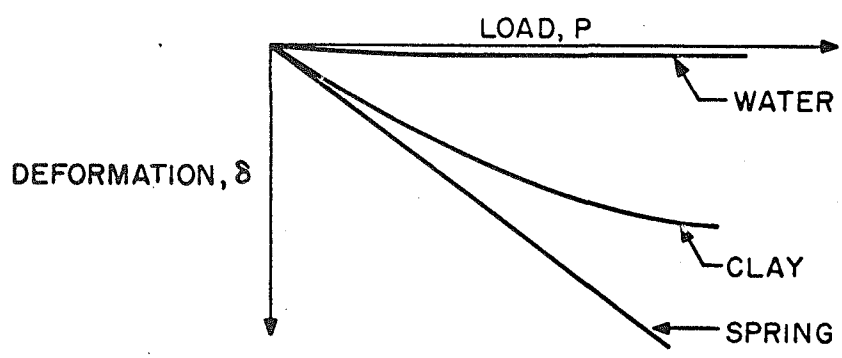

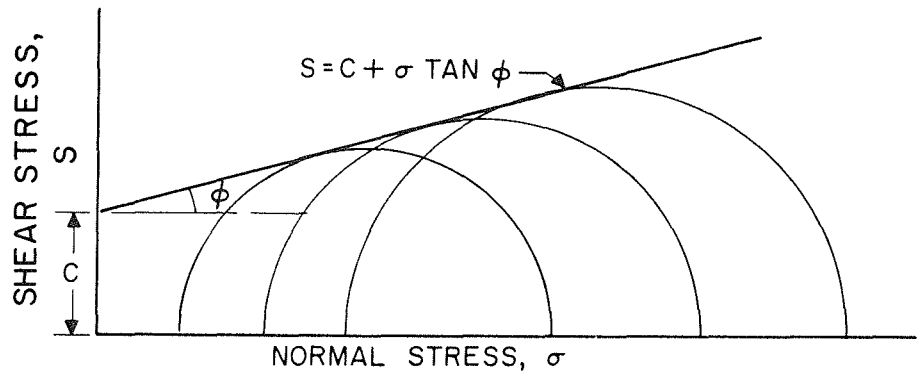

GENERAL CASE, SANDY-CLAY SOIL

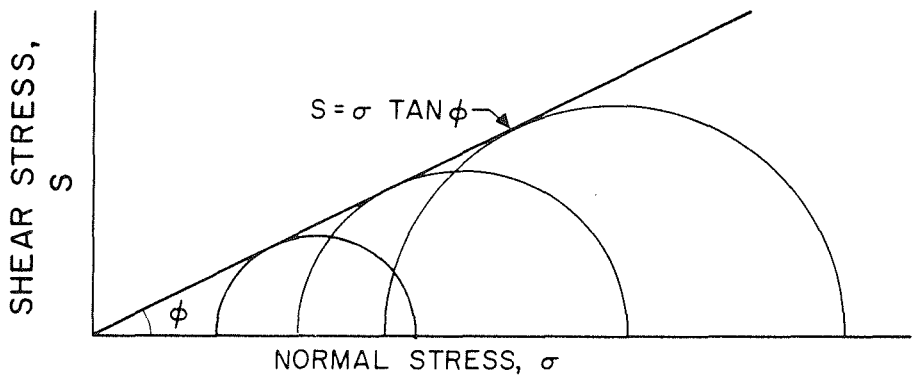

GENERAL CASE, CLEAN SAND

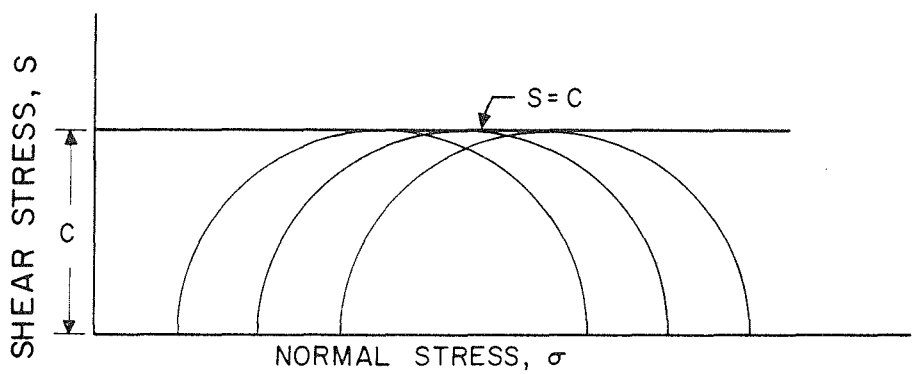

GENERAL CASE, CLAY SOIL

EXHIBIT D1 - COULOMB-MOHR STRENGTH ENVELOPES FOR VARIOUS SOILS

Permeability is the ability of the soil to support the flow of water. Soil, no matter how well graded and compacted, has voids and interstices which permit the flow of liquids and gases through its pores. Permeability plays an important part in determining flow in soils, such as flow through wells and seepage through dams. Further, the state of stress in the pore water governs the strength properties of the soil. Hydrostatic uplift and pressure due to height (as in dams) is included in this category. In the case of lunar soils, insofar as can be determined, moisture is not present. Thus, problems of lunar soils related to water flow, cohesion, and pore water can be largely ignored.

b. Bearing Capacity

At this juncture, it is well to consider the principle of bearing capacity. From observations, two parameters based on performance have been used. These are soil type and contact pressure. The use of these parameters in fixing what is termed allowable bearing pressure implies that excessive deformation will not occur. This is not the case. Several phenomena occurring in foundation deformations should be considered.

First, there is a direct proportionality between contact pressure and the magnitude of shear strength that is mobilized, but only an approximate proportionality between the contact pressure and the shear strains that are produced. Increasing deformation results in increasing shear strain until rupture. This is termed mobilization of shear strength. The contact pressure that mobilizes shearing strength in a soil is the bearing capacity.

Furthermore, volume changes are developed in the soil mass; shearing strains are not related to these compressibility strains, since a time factor is involved in compressibility. Thus, stresses due to volume change are not controlled solely by contact pressure, whereas the shear deformations that develop are directly related to contact pressure. Controlling the contact pressure will result in controlling the deformations due to shearing.

In examining the mechanism of failure in a bearing capacity problem, the classical Terzaghi solution will be followed (Reference 1). This involves a two-dimensional consideration. For the purposes of locomotion analysis, the contact surface is assumed to be essentially coplanar with the ground surface.

Let it be assumed that the load rests on a very long strip with a uniform width, in contrast to a square or circularly loaded area. Before the load is applied to a footing, the soil beneath the footing is in a state of elastic equilibrium. An increase in load causes the state of stress to pass through a transition to plastic equilibrium. If the properties of the soil are such that the strain which precedes the failure of the soil by plastic flow is very small, the footing does not sink into the ground until plastic equilibrium is reached. This relation is shown in Exhibit D2, curve a, and is called general shear failure. Should the properties of the soil be such that the plastic deformation is associated with large strains, the accompanying failure condition is called local shear failure, and is depicted by curve b in Exhibit D2.

With these definitions established, the failure condition for an ideal soil and rough base can be investigated.

Summing forces vertically, (Exhibit D3):

$$Q - 2\,P_p - 2\,C_A \sin\phi = 0$$

But

$$C_A = \frac{cB}{2\cos\phi}$$

$$\therefore\ Q - 2\,P_p - \frac{cB}{\cos\phi} \cdot \sin\phi = 0$$

or

$$Q = 2\,P_p + cB\tan\phi \qquad (5)$$

By definition, bearing capacity

$$q = \frac{Q}{B}$$

Thus

$$q = \frac{2\,P_p}{B} + c\tan\phi$$

where Q = total load on soil

B = width of footing

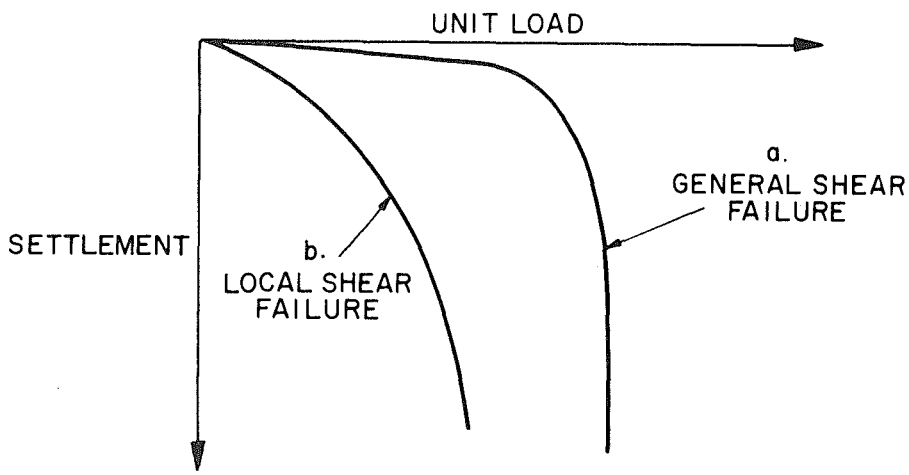

Source: Reference 1

EXHIBIT D2 - LOAD-STRAIN RELATIONSHIP

P_p = passive pressure of soil mass

ϕ = angle of internal friction of soil mass

C_A = resultant cohesion

c = unit cohesion in Coulomb's equation

q = unit load on footing

If P_p is considered to be comprised of three components--P_ϕ due to friction, P_q due to surcharge, and P_c due to cohesion,

$$q = \frac{2\,(P_\phi + P_q + P_c)}{B} + c \tan \phi \qquad (6)$$

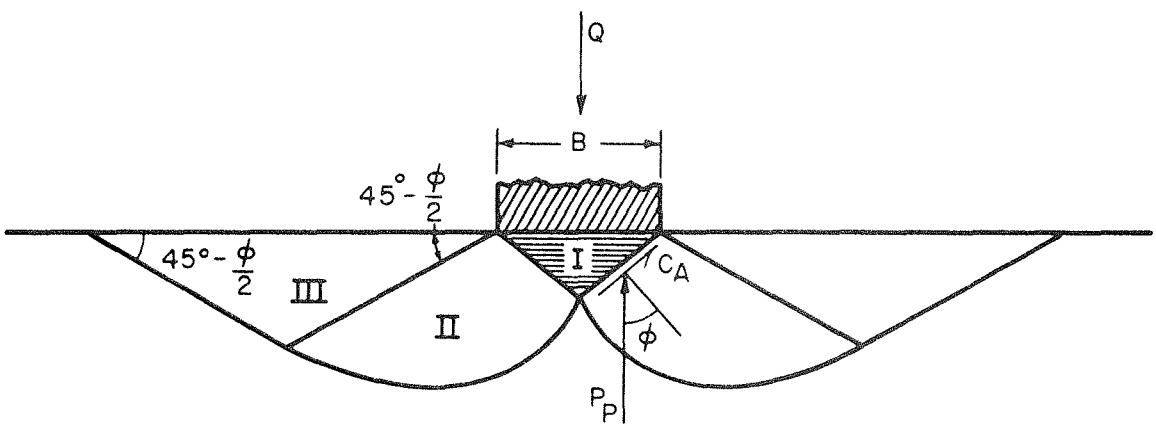

Zone I - Vertical stress, acts as part of footing.
Zone II - Radial stress, plastic deformation.
Zone III - Radial stress, elastic deformation.

EXHIBIT D3 - SHEAR BOUNDARIES FOR CONTINUOUS FOOTING AT FAILURE, IDEAL SOIL AND ROUGH BASE

At depth the above analysis is invalid, in which case a surcharge γD_f is introduced, where

D_f = depth of base of footing below horizontal soil surface

γ = unit weight of soil which is valid for the range of $D_f/B \leq 1$ or shallow footings.

Terzaghi has introduced the symbols:

$$N_c = \frac{2\ P_c}{Bc} + \tan \phi$$

$$N\gamma = \frac{4\ P_\phi}{B^2 \gamma}$$

$$N_q = \frac{2\ P_q}{B \cdot q} \qquad (q = \gamma \cdot D_f)$$

These are dimensionless factors dependent only upon ϕ ; therefore, they can be computed once for all and substituted into Equation (6).

Thus

$$q = \frac{Q}{B} = cN_c + \gamma D_f N_q + \frac{1}{2}\ \gamma B N_\gamma \tag{7}$$

Since we assume no surcharge, the N_q term falls out in a locomotion application. Exhibit D4 depicts the relationship of these bearing capacity coefficients with values of ϕ .

For a circular loaded area of radius r we obtain

$$q = 1.36\ cN_c + 0.6\ \gamma\ r\ N_\gamma \tag{8}$$

and for a square loaded area of area B x B this becomes

$$q = 1.3\ cN_c + 0.4\ B\gamma\ N_\gamma \tag{9}$$

These equations assume that the shear resistance of the soil is fully mobilized. However, for fairly loose or soft soils, the stress-strain curve may appear similar to that shown below.

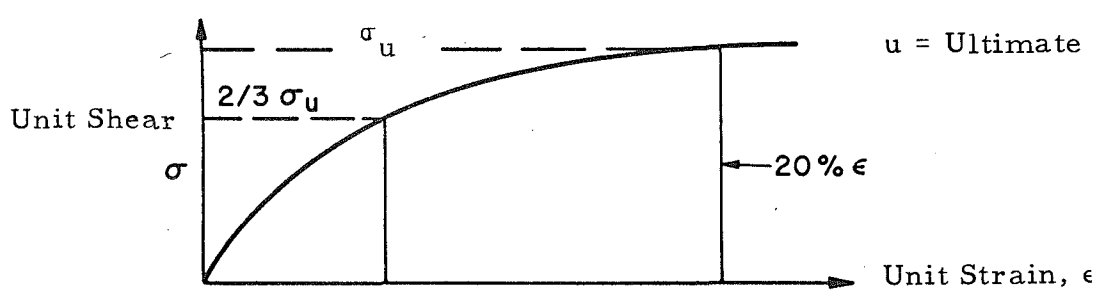

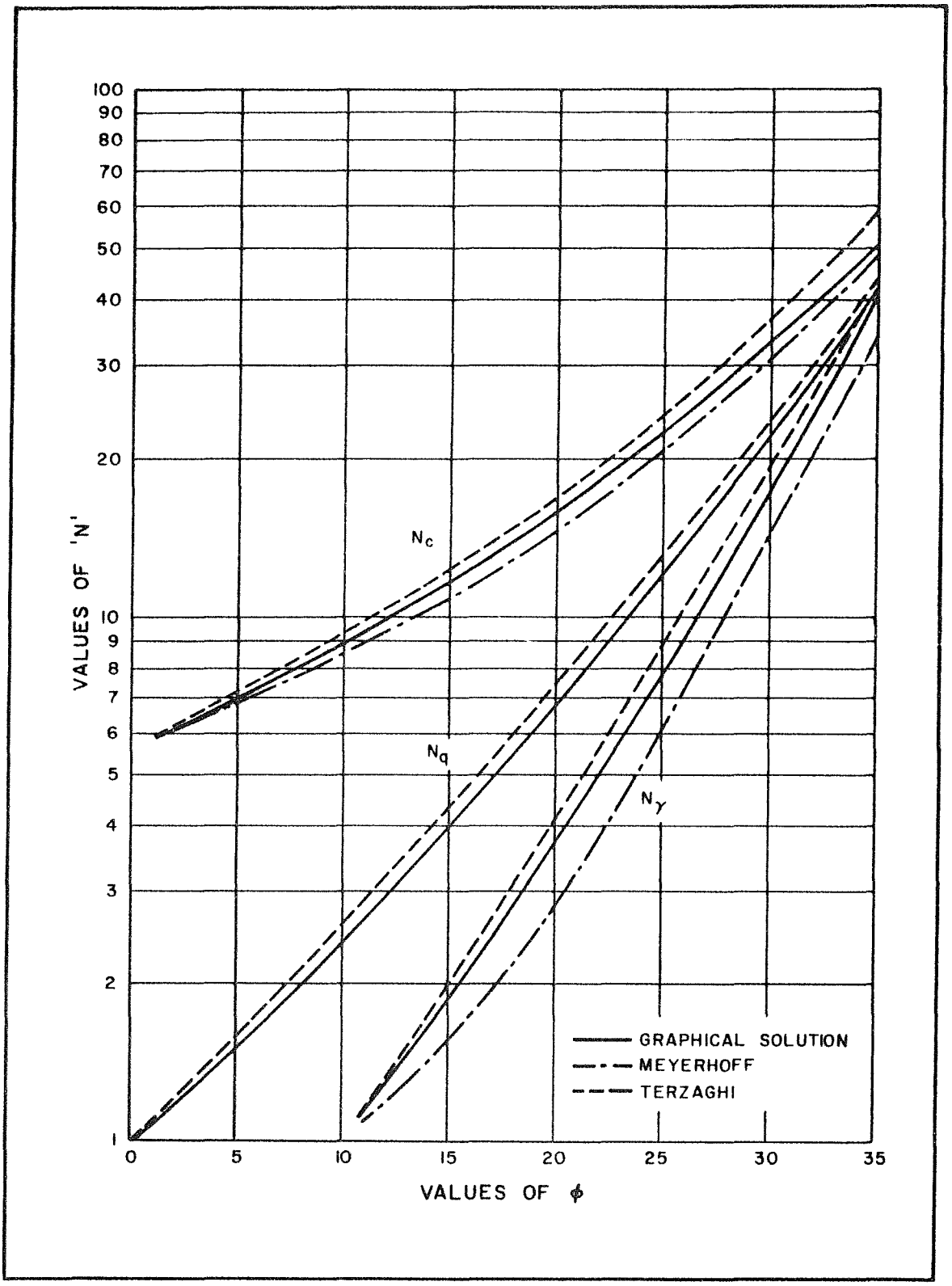

EXHIBIT D4 - CHART OF BEARING CAPACITY FACTORS

That is, the deformations near the footing may exceed 20 percent unit strain in order to mobilize the shear resistance far out on the failure plane. There will be excessive shear deformation occurring before all shear resistance is mobilized. To avoid these high deformations it is customary to use only 2/3 of the ultimate shear stress; thus the Coulomb equation becomes

$$2/3\ s = 2/3\ c + 2/3\ \sigma \tan \phi$$

and

$$q' = 2/3\ cN'_c + 1/2\gamma BN'_\gamma$$

where $c' = 2/3c$

$\tan \phi' = 2/3 \tan \phi$

in computing the values of N'_c and N'_γ.

These bearing capacity equations assume that excessive deformations will not occur. If the stress-strain curve appears as shown above, the ultimate shear resistance is reduced by 1/3 to preclude excessive deformation. This is the assumed condition for lunar surface soils, where the low gravity effect is assumed to develop low surface densities.

With these basic principles in mind, actual lunar locomotion can be considered. The guiding principle in development of mobile equipment for lunar application is that of the relationship between soil strength and deformation characteristics. Since it is desired to keep the vehicle supported on the ground surface, vehicles of high "flotation" characteristics are desired. Opposing is the fact that low gravity forces, coupled with low surface density of the soil and lack of cohesion, produce a soil with a very low shear strength.

As a matter of fact, the soil may behave under the action of a moving wheel much like a viscous fluid with low shear strength, as suggested by Winterkorn (Reference 2). Alleviation of this condition can be obtained only by removal of the loose surface soil, compaction, stabilization, or some combination of these methods. Thus we are dealing immediately with conditions that favor high deformations. These conditions rule out immediately all types of traversing configurations based on high unit loads

such as creepers, crawlers, screws, and pogos, even though the mobility of these devices in rough hard terrain is of a high degree.

If we look to known tractive devices, the wheel and continuous track suggest themselves. These will be examined in the light of the above a priori knowledge.

c. Distribution of Pressure

As stated by Taylor (Reference 3) the distribution of pressure below footings on cohesionless soil is very different from that below footings on cohesive soil. Though the calculation of the magnitude of contact pressure is a complex problem, it is known from the theory of elasticity that a rigid footing produces a contact pressure on a perfectly elastic supporting medium which increases from the center to the rim. For an elastic footing the distribution of the contact pressure depends on the elastic properties of the supporting medium, the flexural rigidity of the footing.

The imprint of the wheel approximates an ellipse. For ease in analysis, an ellipse of low eccentricity can be assumed, or when $e = 1$, a circle. Referring to Equations (7) and (8) it will be seen that the bearing capacity is considerably greater for a circular loaded area than for a square area; hence the use of a circular imprint is a valid assumption. Borowicka (Reference 4) made an analysis of the stress distribution on the base of an elastic circular footing having a radius r and thickness H loaded to q per unit area. He found for a plate on soil that the stiffer the footing became, the less uniform the stress distribution.

The final equations he derived contain a factor k_r which denotes the flexibility of the plate as a function of the ratios of Yound's modulus and Poisson's ratio of the plate and subgrade. For a value of $k_r = \infty$, the plate is rigid and the stress distribution increases to infinity at the edge of the plate. As k_r decreases, the flexibility increases to perfect flexibility of $k_r = 0$. If the plate is assumed to have a width B and infinite length, Borowicka found a similarly shaped stress distribution but of a higher magnitude at the center of the strip for higher values of k_r (see Exhibit D5).

Taylor has summarized the general concepts of pressure distribution in soils; these concepts are valid for square, round, or long footings

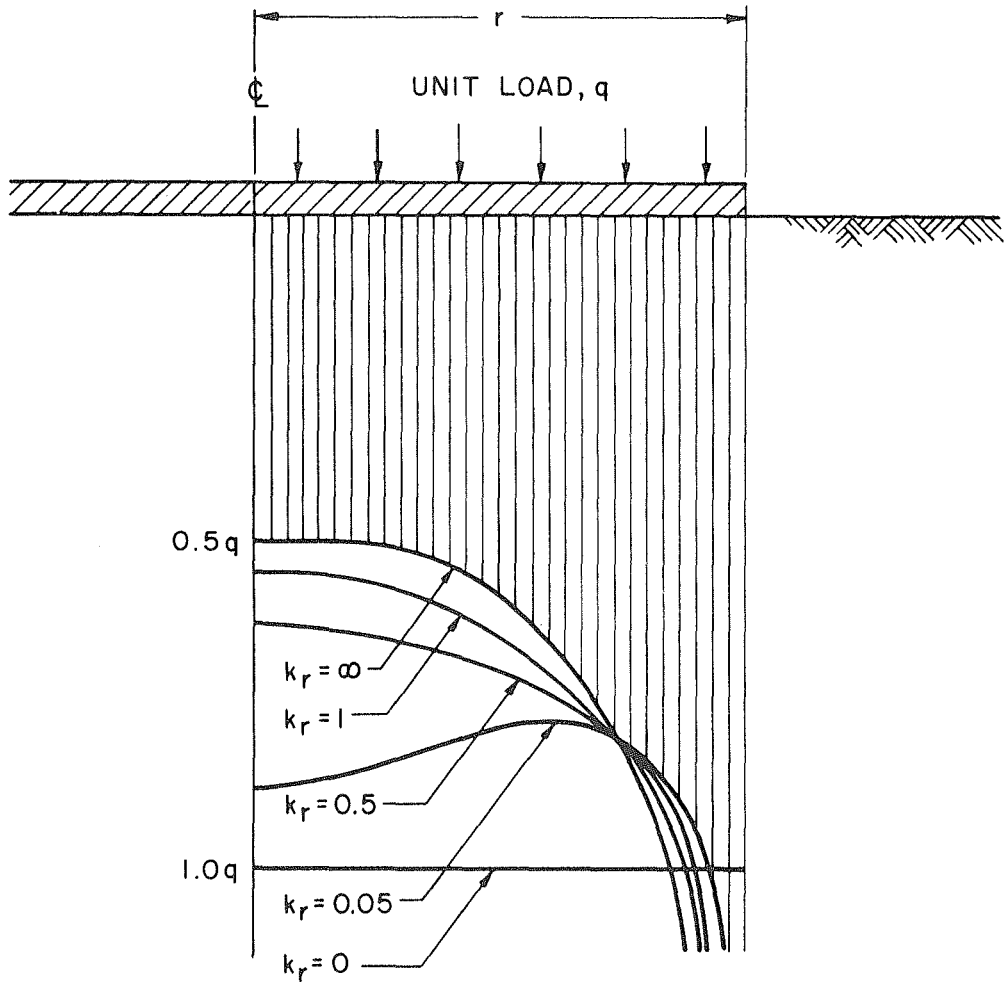

r = radius of plate

q = unit load on plate

Source: Reference 4.

EXHIBIT D5 - CONTACT PRESSURE ON BASE OF UNIFORMLY LOADED CIRCULAR PLATE

for the case of rigid and elastic footings on cohesive or cohesionless soils.

(1) Flexible Footing on the Surface of Cohesionless Soil, Uniformly Distributed Load

Since the footing is completely flexible, the load also acts uniformly on the soil surface with the result that the settlement at the outer edge is greater than in the center due to reduced confinement at the edge. The settlement at the center may be quite small, particularly if the relative density of the soil is high. This condition is depicted in Exhibit D6a.

(2) Rigid Footing on the Surface of Cohesionless Soil

If the footing is rigid, the settlement must be uniform. This means that the total settlement will be small, but the low strength of the soil at the edge will cause high pressures to develop below the center with no pressure at the edge. Exhibit D6b shows this condition, which for wide footings appears as shown in Exhibit D6c. For the case of rigid footings below the surface, the pressure distribution is similar to Exhibit D6b except that small pressures are developed at the edge as shown in Exhibit D6d.

(3) Flexible Footing on Highly Cohesive Soil, Uniformly Distributed Load

In this case, the uniform surface distribution produces a bell-shaped pressure distribution bulb in the soil beneath. These stresses are larger below the center of the footing, causing correspondingly greater strains at this point. Thus a settlement pattern develops as shown in Exhibit D7a.

(4) Rigid Footing on the Surface of Cohesive Soil

For a rigid footing the settlement must be uniform, in which case the settlement must be the same at the center and at the edges. Thus at a depth of about 1/2 B, the pressure distribution is uniform (Exhibit D7b). The surface distribution must thus be greater at the edges, as shown in Exhibit D7c.

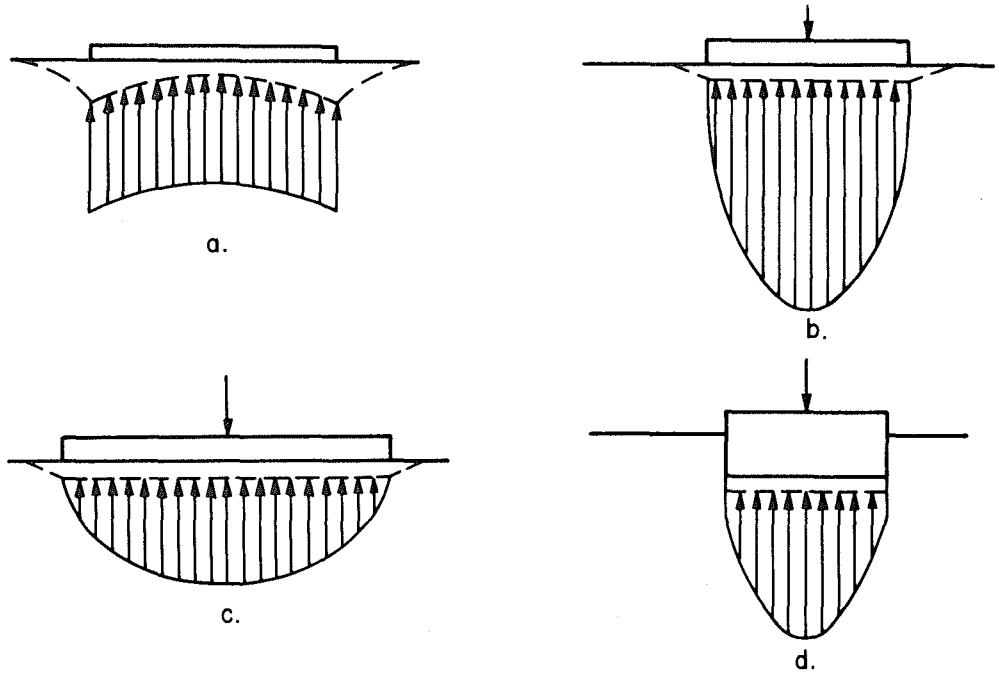

Source: Reference 3

EXHIBIT D6 - SETTLEMENTS AND PRESSURE DISTRIBUTION IN COHESIONLESS SOILS

Now, considering the soil properties, the pressure distribution acting on rigid and elastic plates can be examined for various soils. An increase in the load on a footing causes a progressive transition of the loaded material from elastic to plastic equilibrium. This transition in turn influences the intensity and distribution of the stresses in the material as well as the distribution of the contact pressure on the base of the footing. This effect is shown in Exhibit D8.

Exhibit D8a shows the pressure distribution across the bottom of a smooth rigid footing supported by a real, elastic material. Curve C denotes the shape of the distribution curve as the material passes from the elastic to the plastic state; curve C_u represents the failure condition assuming the material adheres to the base whereupon the stress is due entirely to cohesion. Exhibit D8b represents the condition that obtains for either a rigid or flexible base resting on dry cohesionless sand. Note that the pressure distribution is greatest at the center and decreases

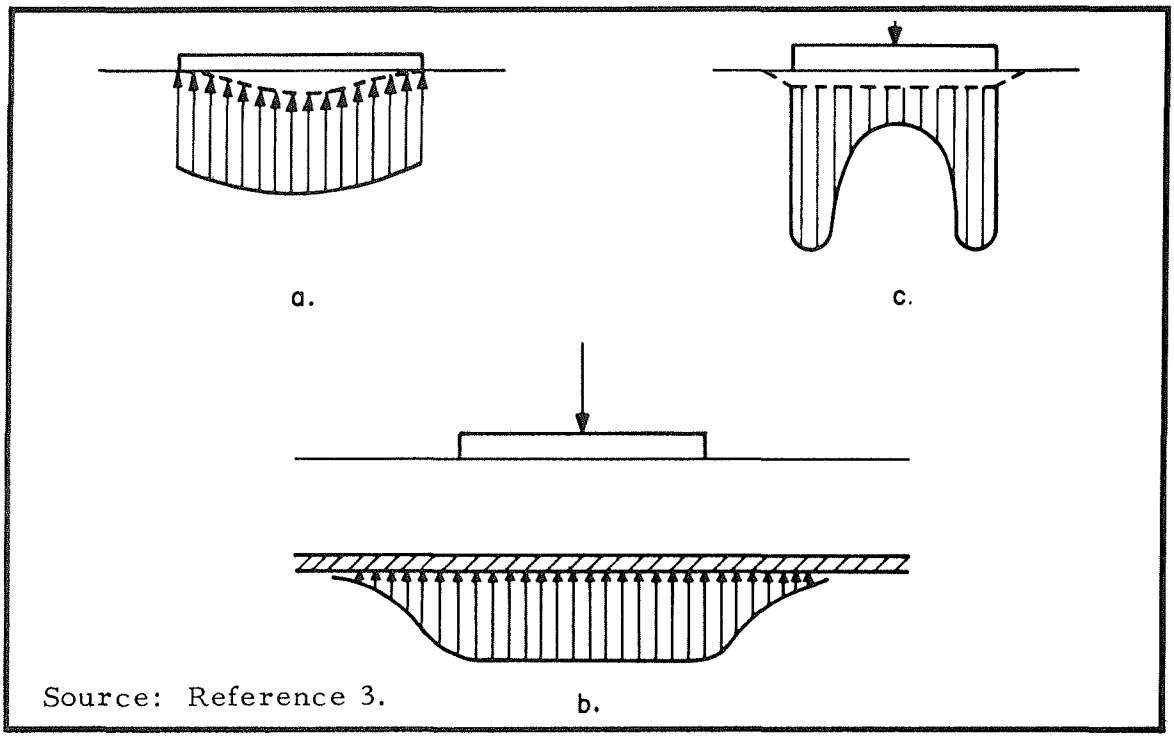

Source: Reference 3.

EXHIBIT D7 - SETTLEMENTS AND PRESSURE DISTRIBUTION IN COHESIVE SOILS

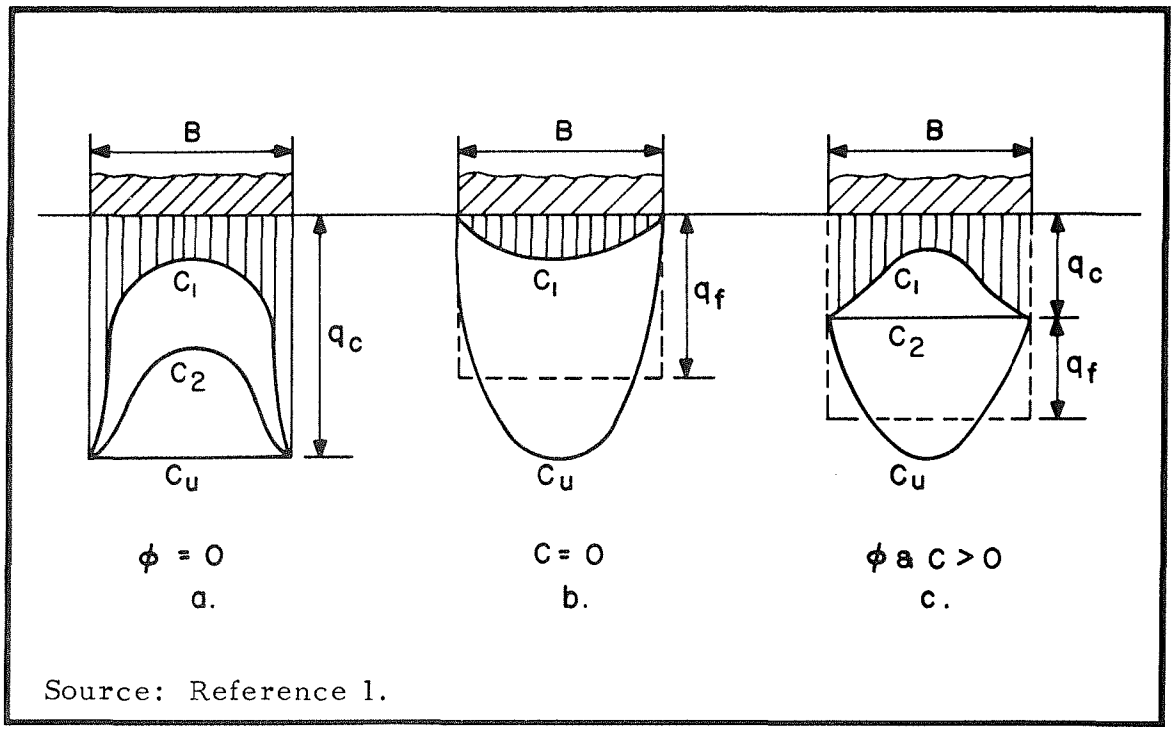

Source: Reference 1.

EXHIBIT D8 - CHANGE IN DISTRIBUTION OF CONTACT PRESSURE AS A FUNCTION OF LOAD AND SOIL TYPE

to zero at the rim; at the ultimate or failure condition the pressure increases greatly due to increased friction resistance.

Exhibit D8c represents the case for a soil having characteristics intermediate between a cohesive and cohesionless behavior. For light loads the pressure is due to mobilization of cohesion, and with increasing load the frictional resistance is added, resulting in a failure condition similar to D8b. These figures represent the condition that obtains for isotropic, homogeneous soils of great depth, although soils in nature cannot correctly be assumed to be either isotropic or homogeneous.

3. Analysis of the Wheel

As far as the mechanical interrelationships of the wheel and supporting medium are concerned, there are four possible combinations of rigid (inelastic) and elastic interactions. These are the interactions of (1) rigid wheel and rigid support, (2) rigid wheel and elastic (or plastic) support, (3) elastic wheel and rigid support, and (4) elastic wheel and elastic (or plastic) support.

a. Rigid Wheel and Rigid Support

The best example, probably, of this condition is the railway wheel on a steel track. In this case, neglecting air resistance, the rolling resistance of the wheel depends entirely on the stress-strain relation of the contact surfaces. This case offers no interest to lunar applications and will not be considered further.

b. Rigid Wheel and Plastic Support

A rational approach to the solution of this case is possible with the following qualifying assumptions;

(1) The nonhomogeneous character of the soil and its variable properties can be expressed by empirical coefficients.

(2) Compression of the soil by the wheel occurs only in a vertical plane.

(3) The reactions of the soil against rolling are assumed to be perpendicular to the circumference of the wheel.

Under these conditions the action of the rigid wheel can be investigated.

Assume that the pressure p underneath a sinking wheel is a function of the soil properties n and depth z. Then,

$$p = kz^n \tag{10}$$

where k is a constant of proportionality. In this case the work done in compressing the soil under the wheel to depth z_o is

$$L = \int_0^{z_o} p\, dz = \int_0^{z_o} kz^n\, dz = \frac{k\, z_o^{n+1}}{n+1}$$

If it is assumed that deformation is in a vertical direction only, the work L expended in compressing the soil is equal to the rolling resistance R, and

$$R\ell = L\, b\ell$$

where ℓ is distance rolled

b is width of wheel

or

$$R = Lb \tag{11}$$

By summing forces in a vertical direction,

$$R - \int_0^{\theta_o} dN \sin\theta = 0 \tag{12}$$

$$-w + \int_0^{\theta} dN \cos\theta = 0 \tag{13}$$

But

$$dN \cos\theta = -pb\, dx$$

$$dN \sin\theta = pb\, dz$$

which can be substituted into Equations (12) and (13).

Thus:

$$R = \int_0^{z} pb\, dz \tag{14}$$

$$w = \int_0^{z_o} pb\, dx \tag{15}$$

Introducing Equation (10):

$$w = -\int_0^{z_o} bkz^n\, dx \tag{16}$$

In this case n varies from 0 to 1 as a function of stress-strain behavior. For compression stress proportional with depth, $n = 1$. For stress independent of depth, $n = 0$.

If we assume that $n = 0$, a not altogether incorrect assumption for lunar soils, it can be shown that the rolling resistance

$$R = \frac{1}{k}\frac{w^2}{bd} \tag{17}$$

Substituting the value of

$$L = k\frac{z_o^{\,n+1}}{n+1}$$

into Equation (11),

$$R = kb\frac{z_o^{\,n+1}}{n+1} \tag{18}$$

or for values of

$$n = 1;\quad R = \frac{1}{2}kb\, z_o^{\,2}$$

$$n = \frac{1}{2};\quad R = \frac{2}{3}kb\, z_o^{\,3/2}$$

$$n = 0;\quad R = kb\, z_o\ .$$

If the wheel is acted on by the weight w and a pulling force equal to the resistance R, then N represents the soil reaction equal to the sum of the elemental reactions dN (Exhibit D9).

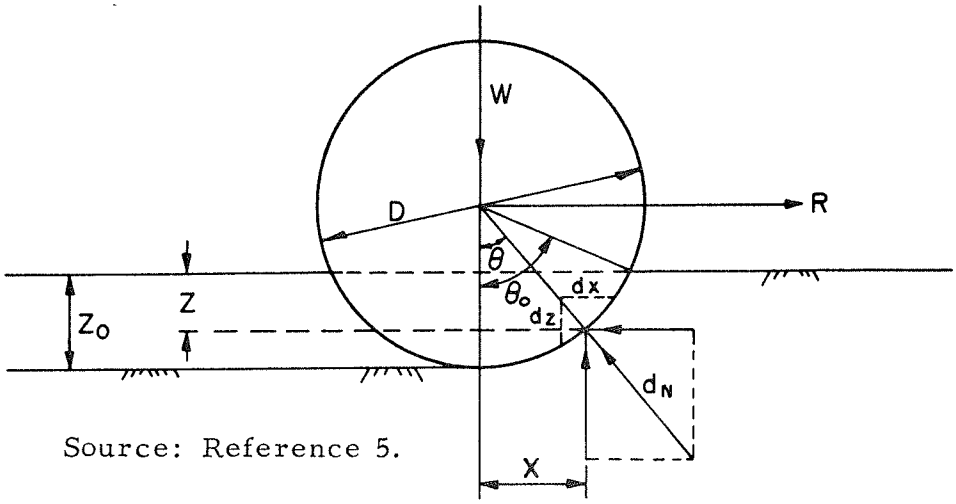

Source: Reference 5.

EXHIBIT D9 - SCHEMATIC WHEEL REPRESENTATION

c. Elastic Wheel and Rigid Support

In the case of an ideally elastic tire and a perfect rigid support, the pressure distribution would be equal to the inflation pressure. This is not the case in practice, however, because of the strength and deformation characteristics of the tire itself. Normally for high pressure tires of 100 psi and over, the contact pressure is equal to the inflation pressure divided by 1.1, according to FAA standards. By Navy standards, the contact pressure of low pressure tires is computed on the basis of the inflation pressure times 1.1. This correction is necessary to offset the effect of the sidewall stiffness. For high pressure tires the sidewall is in tension, and therefore the contact pressure is less than inflation pressures. For low pressure tires the opposite is true, and the contact pressure is greater than the inflation pressure.

The rolling resistance of an elastic wheel on hard surface is a function of load distribution, speed, and inflation pressure. Exact solution of this problem, therefore, cannot be obtained from a theoretical study, but can be approximated from empirical studies. One such empirical relationship attributed to Kamm and reported by Bekker (Reference 5) is

$$R = 5.1 + \frac{5.5 + 18\ W}{p} + \frac{8.5 + 6\ W \frac{(v)^2}{(100)}}{p} \tag{19}$$

where W = wheel load in tons

p = tire pressure in kg/cm^2

v = speed in km/hour

d. Elastic Wheel and Plastic Support

It has been shown from previous discussion that the stress in the soil below a loaded plate is a function of the shape and rigidity of the loaded plate as well as the strength characteristics of the soil. As with elastic wheels over rigid support, the solution of the case considered here does not admit of rigorous analysis. Bekker points out that the mechanics of the relationship between the soil and wheel interface is practically unknown; hence only empirical data can be used to develop an approach to understanding the problem.

From the work of Boussinesq and Burmeister, the relationship between applied normal load and vertical soil stress beneath a loaded area is known. The equation below, derived from Boussinesq's point load equation, shows that the vertical stress below the center of a circular loaded area in an elastic, isotropic, and homogeneous mass is proportional to the magnitude of the unit load.

$$\sigma_z = q \left\{ 1 - \left[\frac{1}{1 + \left(\frac{r}{z}\right)^2} \right]^{3/2} \right\} \tag{20}$$

where q = unit load

z = depth below the load

r = radius of circular area

σ_z = vertical normal stress

This equation shows that a change in pressure due to increase in loading area caused by deflection of the tire acts to reduce the stress in

the soil. Thus low-pressure elastic tires have an advantage over stiffer or rigid wheels in soft ground. For this reason, wide low-pressure tires provide better support in soft soil than rigid wheels, based on stress reduction and on understanding of bearing capacity theory. It should be pointed out, however, that the degree of elasticity of the soil governs the behavior of an elastic wheel; i.e., very elastic soil will produce higher stress concentrations below an elastic loaded area than below a rigid loaded area (Exhibits D6 and D7).

e. Tractive Effort of Wheel

Tractive effort depends upon the shear resistance of the soil and the rolling resistance of the wheel; the latter again is dependent upon the depth of sinkage (Exhibit D9).

$$T.E. = s - R \tag{21}$$

where T.E. = tractive effort

s = shear resistance

R = rolling resistance

In the case of frictional soils, it has been shown that the shear stress is a function of the angle of friction and the normal stress (Exhibit D1).

$$s = \sigma \tan \phi$$

The rolling resistance is shown by Bekker (Reference 5) to depend on the weight, the contact area, and the friction angle.

$$R = f(W, \phi, A) \tag{22}$$

where W = weight

ϕ = angle of internal friction

A = contact area of wheel and soil

Accordingly, the tractive effort is shown to be

$$T.E. = W \tan \phi - f(W, \phi, A) \tag{23}$$

For purely cohesive behavior soils, the shear stress is equal to the cohesion, $s = c$, and the rolling resistance is a function of c and not of ϕ.

$$R = f(W, c, A) \tag{24}$$

Thus, the tractive effort is

$$T.E. = Ac - f(W, c, A) \tag{25}$$

Equations (23) and (25) show that in frictional soils the weight is a governing factor in developing tractive effort, and for cohesive soils the wheel dimensions govern. For a soil having both friction and cohesion components, the equation for tractive effort becomes

$$T.E. = (W \tan \phi + Ac) - f(W, \phi, c, A) \tag{26}$$

For lunar soils having no known cohesive component, Equation (23) is applicable.

By analysis of the bearing capacity equation for both circular loaded areas and long strip loads, it can be shown that for the same area and no surcharge a very considerable difference in wheel behavior results from permutations of wheel shape and soil type. For pure cohesive soils, small-diameter wide tires produce higher load bearing capacity than large-diameter narrow wheels of the same contact area, whereas frictional soils develop greater bearing capacities for circular loaded areas only when the equivalent rectangular loaded area is at least twice as long as it is wide. Normally this is not possible, and in this type of soil the wheel dimensions necessary to achieve the condition cannot be satisfied.

It will be shown that this constraint does not exist on the moon, however. It is again pointed out that if the soil is so soft that under the imposed loads high deformations occur because of local shear, the large-diameter narrow wheel may prove to perform better in terms of reduced drag resistance, provided that firm supporting strata are available relatively near the surface.

4. Analysis of the Track

The track can be considered to be an improved surface upon which the wheel is permitted to roll. The addition of bogies between the forward idler and rear wheel serves to distribute the weight of the carriage over the intermediate track portion. A track thus results in a lower unit load over the supporting medium for a given weight as well as improved rolling characteristics for the wheel. Tractive effort can be improved by the addition of cleats placed transversely on the track, where the cleats serve to translate the forces involved from frictional resistance between the track and soil to shear resistance of the soil itself: that is, the cleats act to mobilize the shearing resistance of the soil.

The motion of a track can be considered to be composed of two separate actions. The first is the forward motion of the circular portion of the track, which produces an action identical to a slowly turning wheel. The second is the action of the flat portion of the track and the net effective horizontal component of the rear driver wheel. This latter may be quite small if the soil is firm; therefore it can be generally neglected. The horizontal tracked portion will be considered to act in a manner similar to that of a footing resting on the soil. Since the forward motion of the track is accompanied by local shear in the case of cohesive soils, and by displacement in the case of noncohesive or granular soils such as represented by lunar dust, it will be assumed that this resistance is negligible in the case of a tracked vehicle (Exhibit D10).

a. Behavior in Clay

In the case of movement over a clay soil, the cleats will penetrate the soil and result in local shear of the soil around the cleat. General shear failure will not occur if the bearing capacity is not exceeded. This soil condition requires an investigation of the size and spacing.

First, the cleat size in terms of h and w should be correctly proportioned. Since the area h x w controls the area of soil stressed by impending shear of the soil at failure it should be as large as

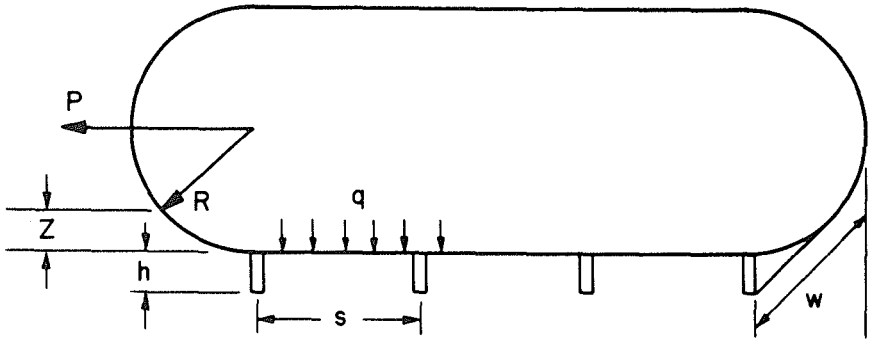

Z = Depth of settlement in soil
R = Radius of forward idle wheel
P = Rolling resistance
h = Depth of cleat
s = Cleat spacing
w = Width of track
q = Unit load on track

EXHIBIT D10 - ANALYSIS OF TRACK

practicable. However, h values that are too large will result in clogging; thus w is the more significant dimension.

The spacing s involves two factors also. The first of these is the stress distribution of the soil back of the cleat as the pull is increased. This factor would indicate a value of s approximately 2w, if the cleat is assumed to behave as a footing tipped 90°. To achieve better performance they should be closer than this, and the second factor, clogging between cleats, becomes more important. In practice, s is usually somewhat more than w, that is, 1.2 to 1.4 w.

When failure impinges and the cleats have acted to mobilize all the shearing resistance of the soil, failure will occur on a plane w wide and h deep at the bottom of the cleat. Since cohesion is also involved, this shear resistance is greater in these soils than in sand; that is, the drawbar pull will be greater providing the soil is not so stiff that the cleats do not penetrate full depth. It should be recalled that in a cohesive soil some energy losses will occur because of local shear and displacement of the soil ahead of the track to depth z.

b. Behavior in Sand

Movement over a sandy soil that has essentially no cohesion involves a slightly different behavior. In this case the resistance encountered by the front of the track in displacing the sand will be small, providing the sand is relatively dense or is underlain by firmer strata below. For a lunar environment, this resistance can be neglected entirely. With movement of the track, the sand is compacted; that is, the particles are brought into closer position with each other. The normal stress q produces a partial confinement of the sand with a horizontal shearing resistance component which varies with q. Thus, at incipient failure there is again mobilization of shear along a horizontal plane w wide. The drawbar pull will involve a combined function of the density of the sand and the normal stress q.

c. Bearing Capacity of Tracks

The track conforms generally to a long and narrow loaded strip--the condition investigated earlier for bearing capacity.

From Exhibit D11 it can be seen that a tracked vehicle imposes loading conditions on the soil which approximate the situation where two parallel strip footings are located in proximity to one another. The shaded areas represent those portions of the substrata where the stresses and strains overlap in the stressed zones. Thus, it can be seen that the spacing of the tracks governs the total supporting capacity of the soil. In the case of general shear failure this factor would be important, whereas the local shear failure case accompanied by high deformations does not result in the shear resistance being fully mobilized in the Rankine zones.

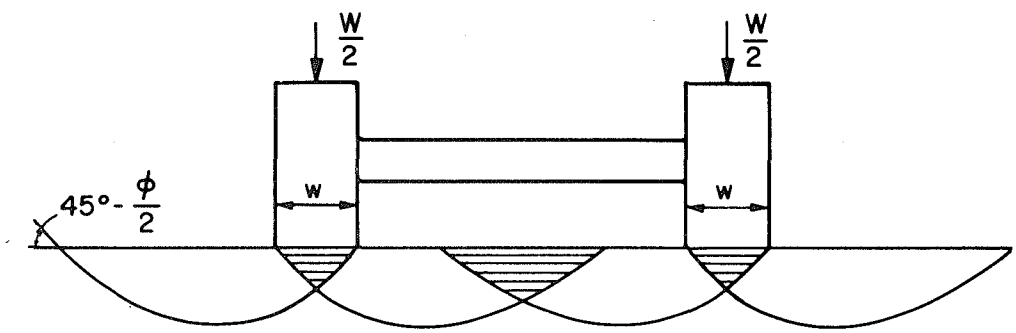

Real Soil, Rough Base

EXHIBIT D11 - FOOTING EFFECT OF TRACKED VEHICLE

For the general shear case, the total bearing capacity of the soil may be determined from Equation (27):

$$Q = W = 2\,w\,l\,(cn_c + \gamma D_f N_q + \frac{1}{2}\gamma w N_\gamma) \qquad (27)$$

where w = width of track

l = length of track

practicable. However, h values that are too large will result in clogging; thus w is the more significant dimension.

The spacing s involves two factors also. The first of these is the stress distribution of the soil back of the cleat as the pull is increased. This factor would indicate a value of s approximately 2w, if the cleat is assumed to behave as a footing tipped 90°. To achieve better performance they should be closer than this, and the second factor, clogging between cleats, becomes more important. In practice, s is usually somewhat more than w, that is, 1.2 to 1.4 w.

When failure impinges and the cleats have acted to mobilize all the shearing resistance of the soil, failure will occur on a plane w wide and h deep at the bottom of the cleat. Since cohesion is also involved, this shear resistance is greater in these soils than in sand; that is, the drawbar pull will be greater providing the soil is not so stiff that the cleats do not penetrate full depth. It should be recalled that in a cohesive soil some energy losses will occur because of local shear and displacement of the soil ahead of the track to depth z.

b. Behavior in Sand

Movement over a sandy soil that has essentially no cohesion involves a slightly different behavior. In this case the resistance encountered by the front of the track in displacing the sand will be small, providing the sand is relatively dense or is underlain by firmer strata below. For a lunar environment, this resistance can be neglected entirely. With movement of the track, the sand is compacted; that is, the particles are brought into closer position with each other. The normal stress q produces a partial confinement of the sand with a horizontal shearing resistance component which varies with q. Thus, at incipient failure there is again mobilization of shear along a horizontal plane w wide. The drawbar pull will involve a combined function of the density of the sand and the normal stress q.

c. Bearing Capacity of Tracks

The track conforms generally to a long and narrow loaded strip--the condition investigated earlier for bearing capacity.

developed shear resistance, and this factor must be considered in evaluating tractive effort.

5. Locomotion Rationale

The literature abounds with unique-appearing locomotion devices that are thought to be applicable to lunar surface operations. An examination of the requirements for lunar locomotion and the range of terrain environments expected does not indicate that unproven kinematic devices will find any greater application in the lunar environment than on earth. With very few exceptions, walkers, screws, and devices of this type have not been used on the surface of the earth, mainly because the problems solved by these devices do not require solution on earth and are not considered to require solution on the moon.

The two principal devices to be considered are the track-laying device and the wheel. A brief comparison of these two mechanisms shows that the use of a track in lieu of a wheel system is usually because of the need for a large gross contact area or the advantage of the bridging effects of a track. The wheel, on the other hand, offers a maneuverability and operational simplicity not associated with tracked devices.

Considering first the tractive effort of these two mechanisms, the Coulomb relationship has been used to represent the developed shear resistance of the soil. The first term of this equation representing the cohesion component is not applicable, since the lunar soil is not considered to have a cohesive component; thus a consideration of maximum contact area need not be made. The second term involves the vehicle weight and the internal friction of the soil. The latter term may be roughly fixed at a value of 28° to 32°. The tractive effort then becomes a function only of the weight of the vehicle. The net developed tractive effort is also a function of the rolling resistance, which from external effects is similar for the wheel and the track. The internal resistance or the drive horsepower required for a tracked device would be expected to be considerably higher than for a simple wheel.

The diameter of the wheel or the length of the track would need to be maximized from a consideration of the irregularities, faults, and

obstacles to be negotiated. A limitation that may affect the maximum size would the the size of the space "truck" that would transport the device to the moon. This may prove to be an absolute restriction on the track mechanism, whereas wheels might be expanded by inflation techniques considerably beyond the diameter occupied during transit. The width of the wheel or the track will be varied to provide contact pressures consistent with the bearing capacity of the lunar soil. The effect of the lower gravity tends to compensate for low bearing capacity, so that either mechanization can be considered.

At low speeds and in the interest of simplicity, it might be quite desirable to provide wheels with all of the compliance necessary to perform the vehicle suspension function. Material considerations thus become relevant; however, compliant materials with which to construct a lunar tire are now in development.

It is interesting to compare the traction capability of track and wheel vehicles as used in earth excavation applications. Comparisons are shown below for surface conditions that may bear some relationship to lunar surface conditions.

	Coefficient of Traction		Traction (lb/ton of Vehicle Weight)	
Surface and Condition	Crawlers	Tires	Crawlers	Tires
Concrete, dry	0.45	0.95	900	1900
Stabilized soil, dry	0.90	0.60	1800	1200
Firm soils, dry	0.90	0.55	1800	1100
Loose soils, dry	0.60	0.40	1200	800
Loose gravels	0.25	0.36	500	720
Loose sands	0.30	0.27	600	540

Specific conclusions from these data are not warranted without more specific knowledge of the conditions of use; however, it may be inferred that the track vehicle does not offer sufficient tractive advantage to warrant the added weight and complexity.

If the wheel does provide the best solution to locomotion on the moon, the complete rationale demands that the chassis configuration also be examined, i.e., single-axle or multi-axle. A single-axle vehicle requires a third contact with the ground for torque reaction purposes, and as this contact begins to react to part of the torque of the vehicle, it becomes essentially a three-wheeled chassis. Regarding payload, the single-axle vehicle generally will find application where small and compact payloads are required. Small in this case refers to a size that can be distributed on an axle between two large wheels, all of which can be packaged on a "space truck." As the payload begins to exceed these constraints, a multi-axle arrangement is desirable.

From the viewpoint of construction, there is less structure associated with a single-axle than with a multi-axle mechanism, where the structure must be increased to bridge between axles. Multi-axles also require articulation mechanisms to assure that all wheels remain in contact with the terrain, and would include more refined suspension systems.

As far as maneuverability is concerned, as defined by turning radius, the single axle optimizes the turning ability, since the turning radius can be made equal to zero; a multi-axle vehicle generally will require a turning radius at least as long as the wheelbase or longer. Directional stability is improved with multi-axle configuration because of the higher polar moments of inertia of the vehicle and the higher corrective moments resulting from the wheel positions farther from the center of gravity. Cornering also is improved with multi-axle vehicles. The single-axle concept is compatible with low speeds, but multi-axle devices are superior at high speeds.

The foregoing considerations, together with the desirability of interchangeability and modularity in all equipment, have led to the hypothesis that the following design approach will be selected. The basic locomotion propulsive component of the mobile system will be a multipurpose, two-wheel

"tractor" vehicle. This tractor will contain the basic propulsion power supply and a life support capability for the operator. The tractor will have the capability of operation independent of any other element of the mobile system by using retractable torque reaction wheels fore and aft. The basic tractive wheels will be quite large, nominally 10 feet in diameter, and will be of the motorized wheel type wherein the hub contains drive motor, gear reduction, and braking components. The structural array out from the hub will be spoke construction with possibly some suspension-spring and shock-damping capability. The tire will be of "balloon" cross section, "inflated" with a cellular sponge material.

The ecological cabin, discussed in more detail later, will contain life support capability for one man and will provide visibility and control facility for the tractor and the other implements and vehicles to which it attaches.

The power supply may be either a storage supply with solar and/or central station recharging or a chemical conversion system using H_2, O_2 fuel cells, or reciprocating-engine generator systems. The fuel cell and cryocycle systems are particularly attractive for the H_2 and O_2 carried in the liquid cryogenic state, providing considerable heat sink capacity for use in the thermal balance of the vehicle.

Other elements of the mobile system would include implements and special utility vehicles as needed for specific missions. An operational approach and vehicular stable for a typical mission is developed next.

6. Mission Synthesis

For purposes of discussion of the mobile mission on the lunar surface, it is convenient here to synthesize a base configuration and the fixed and mobile equipments of which it is comprised. The concept chosen will emphasize the use of mobile equipment and attempt to minimize the size and construction work (including burying or covering) associated with the fixed installations. An artist's conception is shown in Exhibit D12. The 20-man base will consist of the following:

a. Three mobile vehicle sets, each comprised of a two-wheeled tractor and an ecological semitrailer. The characteristics of

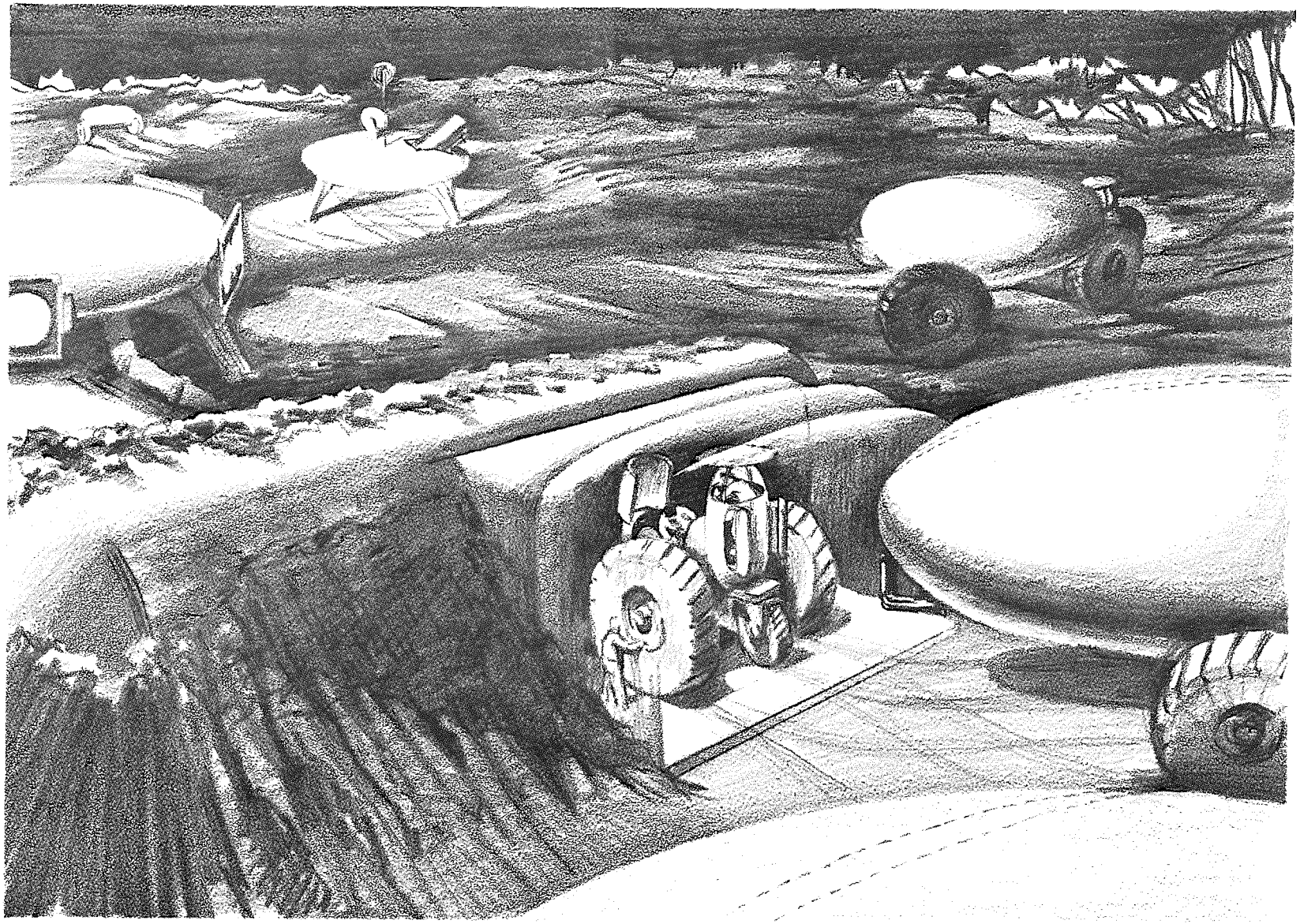

EXHIBIT D12 - ARTIST'S CONCEPTION OF MOBILE LUNAR BASE COMPLEX

the tractor are described elsewhere. The ecological semitrailer will combine life support and living accommodations for a crew of four for normal periods of up to 48 hours, with experimental laboratory facilities of a varying nature depending upon the experimental or exploratory nature of the mission. The tractor vehicles can be decoupled from the semitrailer for (independent or coupled) work activity with other vehicles and/or implements.

b. One main soil-covered (possibly fully or partially buried) "home" base with a normal crew of eight and visiting capacity for all other personnel at the base (20 in all). Principal activity germane to this base will be housekeeping, i.e., food preparation (including box lunches for the mobile vehicles) and maintenance of base equipment and vehicles. The latter function implies an inflatable maintenance dock and airlock.

c. A remote central power station, of the nuclear reactor variety, with ground line connections to the main base. Packaging of the reactor core will be such that an unshielded crane vehicle can be used in the core renewal function. A principal function of the central power station will be the production of cryogenic liquid H_2 and O_2 from reclaimed or newly supplied water, for use in the vehicle fuel cells and ecological systems. The central power station will be activated in the location in which it lands and on the landing stage with which its structure is integral. A straight bunker, or natural topographical hill, will be used to shield the rest of the base areas from the reactor.

d. Various fixed experimental modules positioned as necessary for a variety of tasks. A typical example might be the optical observatory. The basic module design of such installations would be very similar to the living/working module of the ecological semitrailer, except that all space would be devoted to the experimental task equipment. In normal use these modules would be fixed and without mobile capability--probably an integral part of the landing stage structure consequently used at the landing site. Possibly in some instances they would be completely mobile so that they could be towed as a second tandem trailer behind an ecological trailer to some remote area, or so that several trailers might be

established in a geometric array. This latter arrangement might be desirable in establishing a seismic range where the trailers could be used for instrumentation stations.

e. One or more utility logistics trailers to couple alternately to the tractor for materials handling, earth moving, disposal, etc. This trailer should have a low working bed with a long overhang aft of the wheels. It will include a crane facility for pickup and placement of all sizes of objects or for use with a clam bucket. By means of the crane, which will be operated from the tractor "cab," it can load materials on its own bed for transport to other locations. It can also serve as a platform of a conveyer system that transports material dozed onto it, by conveyer, up over structures to be covered.

f. Various special-purpose implements, such as the bulldozed blade, for use with the tractor. The dozed blade will be capable of coupling and decoupling solely by maneuvering the tractor. Blade height can be adjusted by changing the tractor pitch attitude, which is accomplished by adjusting the height of the fore and aft torque bogies in a coordinated fashion. The tractor will have higher power and lower gear ratios available when used as a bulldozer; in extreme circumstances of very high torque requirements, tractors can be tandem-coupled and used to maneuver a single implement.

The normal and continuing operational sequence for the above equipment is as follows. The three tractor-trailer combinations would participate in a duty cycle wherein each would spend one day being fueled and restocked for a 48-hour experimental or exploratory mission. During the off day, the crew would have some relaxation time as well as a chance to consolidate the data and observations of the previous 48-hour mission or to perform routine or special maintenance on their equipment. The mission portion of the cycle may be long-range exploration, short-range experiments with seismic equipment, or operation of the local observatory. The four-man vehicle crew will probably operate in two-man teams in staggered duty cycles, depending on the nature of their mission.

The main base crew would perform the functions of vehicle, base, and food services as well as data reduction, communication, planning, etc.

It is likely that the crews will be rotated between the main base and the vehicle assignments. All personnel would occupy the main base only in the event of an emergency, particularly the occurrence of giant solar flare activity. In such instances, warning time would have to be sufficient to allow the return of distant crews. If this is not possible, each working/living trailer must contain a small, and probably very uncomfortable, heavily shielded area, adequate to hold four men for short periods.

During the construction phase, the vehicles and equipment would be utilized in a slightly different fashion. Six to nine astronauts would land at the base site, where all equipments and supplies had been previously landed. It is assumed that the men have a walking-suit capability (if not a great deal of dexterity) in the vacuum environment. After reconnoitering and replanning, based on the actual situation that they find, and after checking all escape equipment, they will walk to the nearest tractor vehicle and put it into service. With this mobility they can collect the rest of the tractors and trailers, check them out, and put them into service.

Based on their operating schedule, they will collect the supplies they need and immediately establish the main base structure with whatever debarking, transport, and assembly is necessary (all principally by vehicle and crane manipulation), and proceed to the covering operation. The nature of this effort will depend upon the amount and nature of the loose surface material available indigenously. If in ample supply, the loose soil will be dozed over the main base until sufficient overburden is present in the critical directions to shield against the most severe solar flare activity. It may be that local conditions will force the use of blasting to loosen sufficient covering material, or different earth-moving techniques may be required. Sufficient previous knowledge of the site should be available so that there are no catastrophic surprises in this respect, and so that adequate implements and equipment are available to cover the eventualities. During this time the men are living and sleeping in the detached trailers while the tractors are working in the construction activity.

As soon as underground is available, the reactor will be activated and connected to the main base. It will be necessary here to establish a

shield bunker if such is not already available. The scheduling in activating the reactor will depend to some extent on the need for power to process water into cryogenic H_2 and O_2 for lighting, heating, etc.

7. Vehicle Design Considerations

The design of the lunar surface vehicle can be considered here only in conceptual terms. As previously described, it will probably be a two-wheeled, spool-type tractor vehicle with a speed capability of 10 mph and a normal maximum range of 500 miles. Total weight of the tractor will be of the order of 10,000 pounds, with a breakdown approximately as follows: 2,000, drive wheels; 3,000, power supply including fuel for 48-hour mission; 2,500, ecological cabin and environment control equipment; 2,500, structural subsystem.

a. Power Supply

The power supply will probably be a fuel cell system that carries H_2 and O_2 in the liquid cryogenic form. Exhibit D13 shows a comparison of power conversion systems for 1966 technology. The power and time region of interest is spotted in the fuel cell regime.

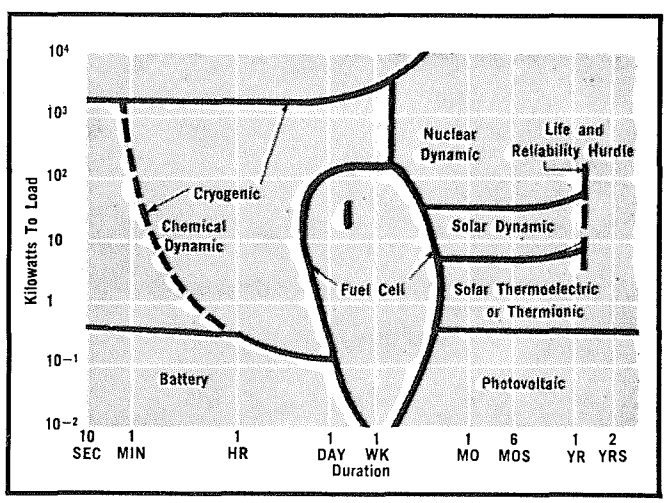

EXHIBIT D13 - COMPARISON OF POWER CONVERSION SYSTEMS FOR 1966 AND BEYOND

Conversion of the fuel and oxygen to the gaseous form will provide thermal capacity to aid in the heat balance of the vehicle system. Peak power output of the system will be of the order of 40 kw for use when the vehicle is acting as a bulldozer or on other high power consumption tasks. When pulling the ecological trailer on long exploration journeys, the continuous power output for all functions will be of the order of 18 kw. At a specific fuel consumption of one pound per kilowatt-hour, the 48-hour exploration mission would require 900 pounds of fuel, which would require in turn about 900 pounds of tankage. At the maximum of 40 kw and 30 lb/kw, the fuel cell system would weigh in at 1,200 pounds.

b. Power Conversion

Power conversion to tractive effort would be accomplished by means of motorized, self-contained, large-diameter wheels. High-speed, sealed electric motors driving through high-ratio, high-efficiency gear reduction systems such as the patented harmonic drive would provide propulsion to the wheel. Steerage will be accomplished by differential propulsion to the two wheels, including reversing one wheel, and braking should be dynamic where possible in order to conserve energy and to keep absorbed energy in the electrical (chemical) form rather than in the thermal form.

Suspension of the vehicle will be the result of compliance in the large "balloon" tires with the possibility that the radial spoke structure from the power hubs to the tire rims may also contain some compliancy. This design approach has the advantage of minimizing the unsprung weight and, as well, the complexity of the basic carrier structure. It will be necessary to circulate coolant to the wheel drive package from the internal or external heat exchangers.

c. Structure

The basic structural system of the vehicle will emphasize the use of aircraft and spacecraft techniques to obtain high strength without undue weight. Simplified operation must be provided, and specifically all coupling and decoupling operations must be accomplished only through exercising basic vehicle propulsion control. Complicated

kinematic devices should be avoided wherever possible, particularly when bearing functions must be performed in the ambient vacuum environment. Such functions will be further complicated by the inevitable presence of lunar dust.

d. Ecological Chamber

Maintaining a tolerable artificial living environment in the lunar vehicle will require detailed attention to a number of basic factors. These include (1) exclusion of harmful excesses of radiation of various types (gamma, ultraviolet, and infrared) as well as probable unusual intensities within the visible range; (2) shielding and attenuation of the primary corpuscular radiation, principally proton and related particulate types having energy content and flux densities of physiological significance; (3) absorption of the kinetic energy of micrometeorite impacts; (4) exclusion of lunar dust; (5) temperature control through adding or extracting thermal energy or humidity control; (6) adjustment of partial pressure of O_2, CO_2, and N_2 and suppression and removal of CO and other noxious and toxic vapors originating physiologically or through thermal radiation or other decomposition of inorganic and organic materials; and (7) maintaining a comfortable noise level within the enclosure, excluding severe auditory shocks and resonances associated with this sort of transport.

Provision must be made for the comparative physical comfort of the man, at least to the exclusion of actual hazards. Assurance is necessary that high unit loadings will not be sustained on the man during random contact with the interior of the chamber, and design features to reduce fatigue should be included. Even at very low speeds, part of this lunar transport promises to be a pretty rough ride, not in the sense of any sustained or very high peak accelerations, but as a series of random jolting movements. These will induce forces and motions in the man and his support equipment that require special attention to minimize injury and damage.

The low gravitational field will result in a peculiar distortion of this picture. Forces and acceleration resulting from the gravitational field

will be reduced 83 percent and the resulting impact velocities, moments, and kinetic energies correspondingly. An acceleration vertically upward, resulting from the impact of a wheel on a small protuberance, without elastic compliance would result in higher vertical velocities and high impact forces when constraint is exerted. Horizontal force-mass equilibrium would be more familiar in terms of earth experience. The effect upon design of the man area in the vehicle will be the necessity for restraint as a precaution against being thrown against projections that would result in high local pressures on the man himself.

e. Chamber Design

The chamber, conceptually an ellipsoidal envelope with the major axis erect, will permit the man to sit or to stand for needed relief (see Exhibit D14). It will contain systems for regenerating the supply of breathing air and for temperature regulation. It will provide protection against micrometeorite impact, against excess thermal radiation from the sun and moon, and hopefully against some of the particulate radiation. It will provide a complete ecological environment available to the explorer for periods of rest and travel over long distances.

The chamber will be removable from the vehicle as a whole or in sections for purposes of repair, replacement of a damaged or exhausted component, or for cleaning. It is designed for comparatively low internal working pressure. Economy of materials and low stress dictate an ellipsoid of revolution referred to above. (The latter choice is also in the interest of economy of the atmospheric components lost when the explorer leaves the chamber.)

From the standpoint of maintaining airtight integrity in the shell under these adverse operating conditions, a plastic structure has much to offer, and perhaps the ultimate in this direction is the inflatable fabric-elastomer laminate shell, with high-modulus rigid flanges or rings at separation and pressure sealing points. Severe jolting in the ride and distortion by twisting, accidental impacts, or rough physical contacts with the environment would have minimum tendency to damage the somewhat pliable envelope. Since the envelope can sustain no bending stress

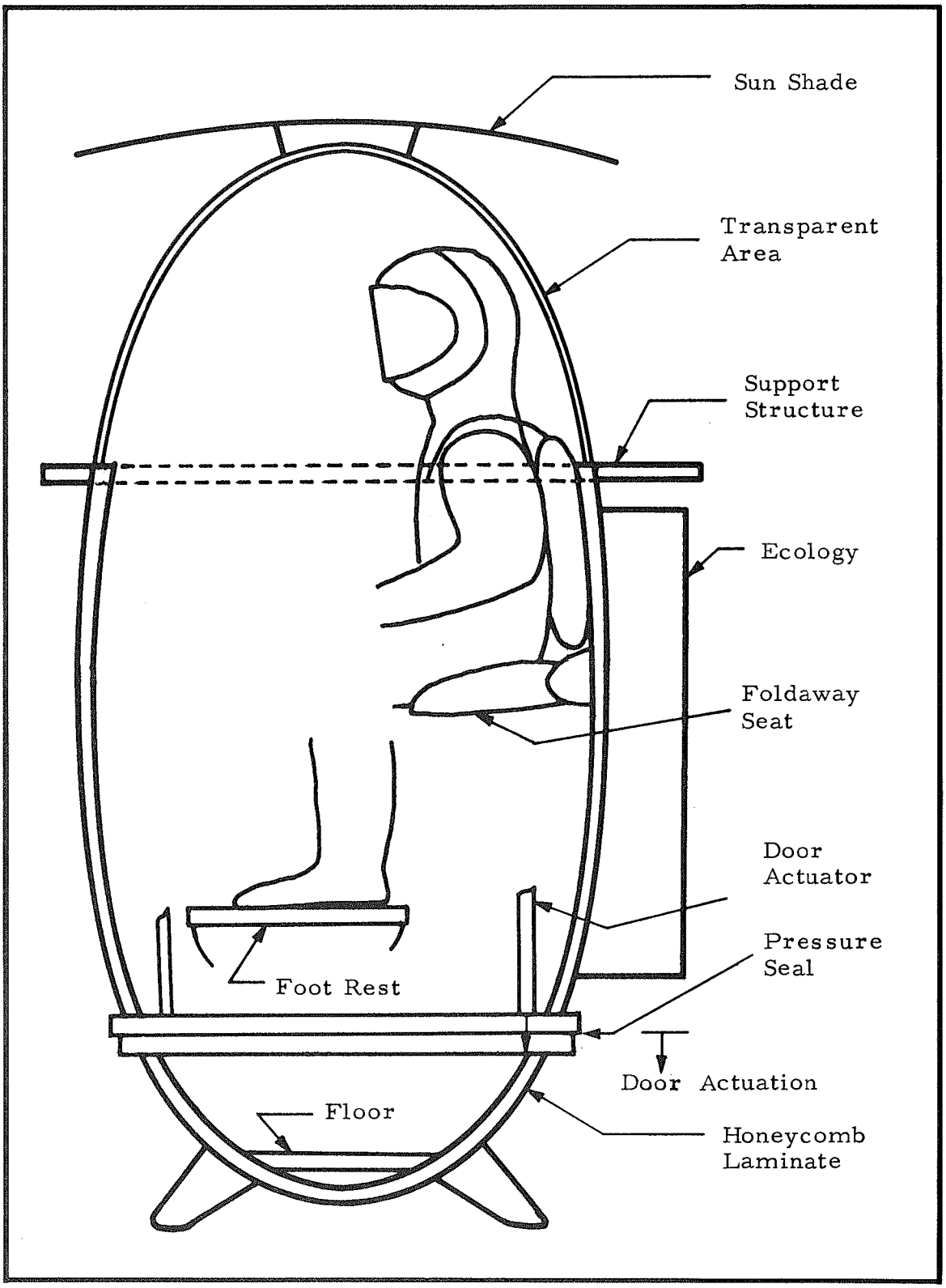

EXHIBIT D14 - SKETCH OF MINIMUM AREA ECOLOGICAL CHAMBER FOR LUNAR VEHICLE

in the configuration mentioned, the pattern of stress can be simple, with resulting high reliability and dependability. Location and correction of leaks, though never easy, is fostered in the simple inflatable type structure with only gentle curves on the inner surfaces.

A possible shortcoming exists in the susceptibility of such an envelope to the various damaging radiation and the difficulty of adapting the structure to attenuation of the kinetic energy in meteoric bombardment. Micrometeoric bombardment may also complicate the optical system, including visual openings in the suit and in the ecological chamber on the vehicle, through penetration and etching of optical surfaces.

There is experimental evidence that the kinetic energy of the particles is reduced by impacting and penetration of successive structural lamina. To afford protection to the occupants, the design principle could be a laminated monocoque consisting of the following layers:

(1) An outer wall with sufficient thickness, density, and elastic (or plastic) properties to break up the impacting particles

(2) An energy-absorbing layer of soft, fibrous materials (possibly spun glass)

(3) A skin against which the particles will come to rest (fiberglass impregnated with an epoxy)

(4) A structural thickness of honeycomb (aluminum alloy, impregnated fabric, or even paper)

(5) An inner skin, probably also fiberglass-epoxy, which may constitute an essentially smooth, continuous inner surface, the whole having considerable structural rigidity

For final pressure tightness there could then be a separate inner bladder, the inflatable component, which affords better reliability against the jolting and twisting without compromising its pressure integrity. The liner might be double walled and self-sealing for assurance against failure through penetration. The bladder would be secured to the monocoque in the circular opening provided for ingress and egress, and its transparent areas would be oriented with respect to the corresponding optical areas in the monocoque.

The chamber will permit the man to enter and to leave, with a high degree of reliability in the delicate aspects of this function--closing and locking, sealing and pressurization. The tendency to vacuum welding at solid interfaces dictates that the heavily loaded locking lugs or other such surfaces (as in a bayonet lock) be placed inside the pressure seal. Because of size limitations it does not seem practical to incorporate an airlock in the chamber for this purpose, since the losses in the lock would not be much different from the loss entailed in depressurizing an entire chamber.

It should provide good visibility in all directions, with strategic areas of high optical accuracy for the man and his optical equipment such as cameras, telescopes, and navigational instruments. Fogging of optical surfaces within, and their clouding with dust externally, will be factors in the ultimate design.

f. Thermal Control

The thermal balance for the external surfaces of the chamber is a matter of considerable interest. It is not possible to make specific selections of solar-absorptivity-to-emissivity ratios to be maintained on the exterior surfaces of the chamber. Conclusive data on the radiant fluxes, solar and lunar, in which the vehicle will actually operate are needed, as well as other system details.

An exploratory calculation is plotted in Exhibit D15 for α/ϵ versus equilibrium temperatures for various lunar surface temperatures for a simple shape, an indication that the required surface coatings are within practical experience. The practical consideration of maintaining the surface condition, once defined, may become a considerable problem. Some mechanism must be provided to prevent the accumulation of lunar dust on the surface--possibly an electrostatic charge. The need for active external thermal control, in addition to the passive techniques, can only be determined in specific system tradeoff. A principal consideration will be the existence of internal heat sinks in the form of cryogenic supplies.

The ecological equipment has the problem of contribution or removal of heat in the artificial environment of the man during a period in which

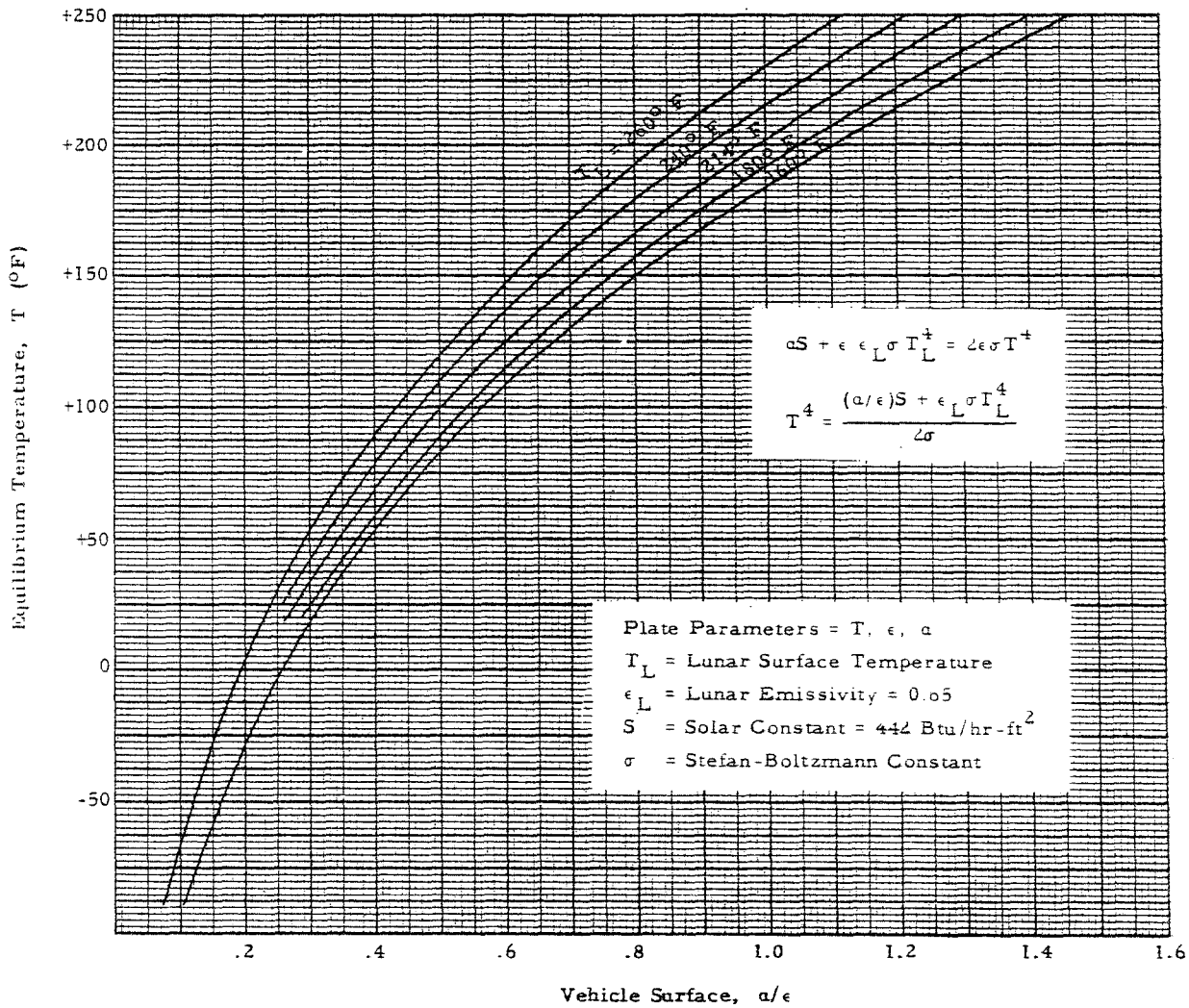

EXHIBIT D15 - NOONDAY EQUILIBRIUM TEMPERATURE FOR LUNAR SURFACE APPROXIMATED BY CONDUCTIVE PLATE 11 TO LUNAR SURFACE

there may also be variation in heat fluxes, the result of time of day, changes in the reflectivity of surface materials, light and shadow differences, and variations in the metabolic rate of the man himself. The latter ranges from 600 Btu/hr (basal) to over 4,000 Btu/hr (during extreme exertion).

As an integral part of the delicate regulation and control of his internal temperature, the man exudes water in the form of sweat, and in his breathing considerable additional water is evaporated within the alveoli. In air conditioning calculations, the total of these varies from 0.17 to 0.4 pounds per hour at 80° F. Control of relative humidity, of the partial pressure of water vapor within this artificial atmosphere, is obviously necessary to the physiological temperature balance. The limits described in Exhibit D16 are an objective in the design of this system.

Allied with both metabolic heat and the loss of water from the body are the oxygen consumption and the respiratory volume. The basal oxygen requirement for the man is 300 quarts of oxygen (NTP) per 24-hour day, equivalent to one-half pint per minute actually taken into the blood (this figure is linearly related to the metabolic rate).

Under normal conditions, absorbing this half-pint of oxygen per minute requires processing 5 quarts of air in the respiratory system; the athlete, in violent exercise, can increase this to 120 quarts of air per minute. The required oxygen dissolved in the blood at 0.0892 pounds per cubic foot (NTP) amounts to 0.895 pounds per day. (At 21 percent oxygen by volume, the diffusion process proceeds in the brief respiratory cycle so that one-fourth of the oxygen present enters the blood.)

It is not reasonable to assume limiting or equilibrium conditions for the process, since a major portion of the oxygen is held chemically combined in the hemoglobin, and in this combination probably exerts a very low and undetermined vapor pressure. Nor is it reasonable to attempt to translate these figures for the equilibrium in the normal atmosphere to apply to the artificial oxygen-rich atmosphere. Moreover, this figure of 0.895 pounds per man-day for a basal rate will have to be increased to correspond with a metabolic rate commensurate with the activity indicated for the daily mission of the explorer. This is a matter for experimental determination.

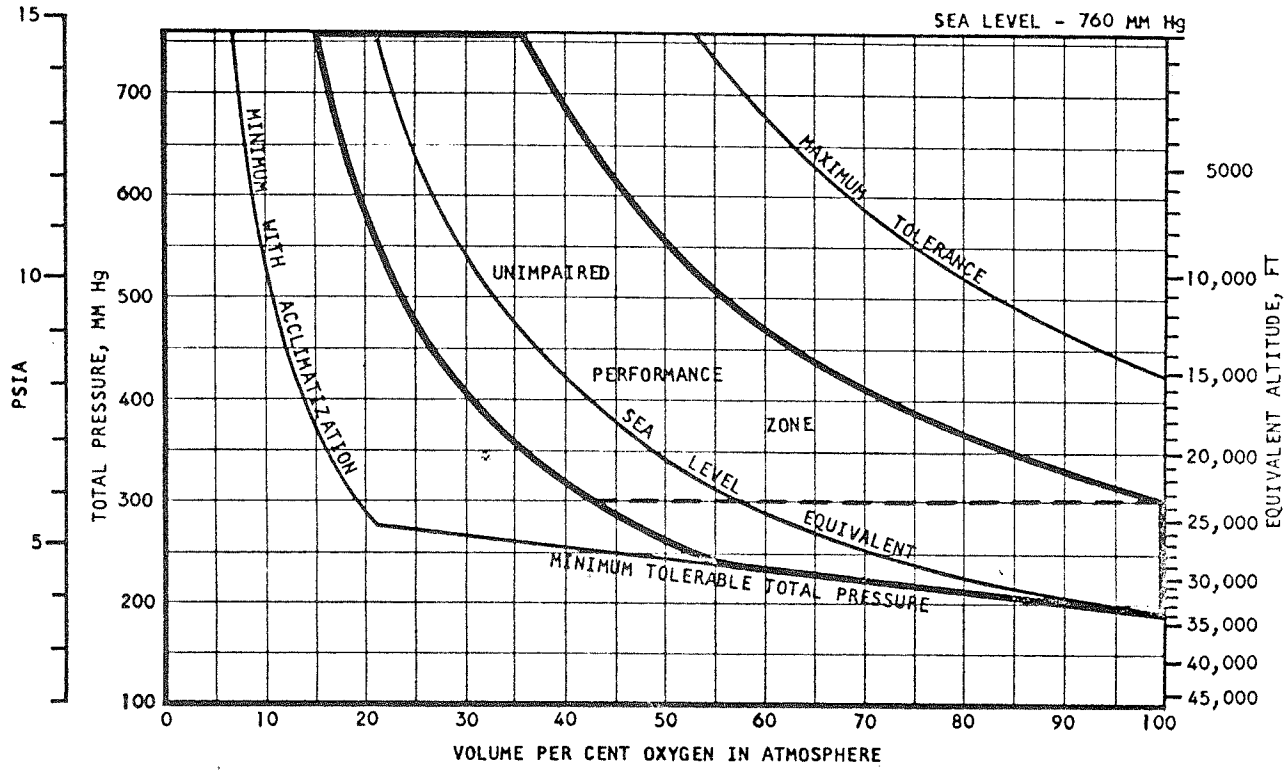

Source: The Garrett Corporation, AiResearch Manufacturing Divisions

EXHIBIT D16 - OXYGEN-PRESSURE EFFECTS

For the sake of discussion, an average metabolic rate five times the basal will be assumed, or 2.25 pounds for the 12-hour period of the vehicle mission.

Using the latter figure, the following distribution can be hypothesized:

Gas	Metabolic	Leakage	Airlock	Purging	Pressurization(1)	Total
O_2	2.25 lb	0.48 lb	0.29 lb	0.43 lb	--	3.46 lb
	(65.2%)	(13.90%)	(8.5%)	(12.4%)		
N_2	--	0.43 lb	0.24 lb	0.38 lb	0.13 lb	1.18 lb
		(36.4%)	(20.4%)	(31.8%)	(11.4%)	

Note: (1) This fraction of N_2 consumption has been allocated to pressurization of the fuel cell and of the water storage tanks.

(As to the basic components of this artificial atmosphere, in the Mercury capsule total pressure is held at 5.1 psia of pure oxygen.) The minimum tolerable partial pressure in a pure oxygen atmosphere is 3.5 psia, and the maximum for unimpaired performance in pure oxygen is thought to be 5 to 6 psia (Exhibit D17). The actual choice of nitrogen dilution (or dilution with neon or helium) or no dilution is unclear at this time. There is indication that low concentrations of nitrogen do actually contribute to the metabolic process and increase the breath-holding time for the individual.

The lunar vehicle environment must closely conform to the atmosphere chosen for the Apollo vehicle and for other lunar base housing in order to obviate aeroembolism. Arbitrarily, partial pressure of 4.25 psia of oxygen and 2 psia nitrogen will be considered. On a weight basis this would be 71 percent O_2 and 29 percent N_2 (oxygen density 0.02345 lb/ft^3, nitrogen 0.010 lb/ft^3).

g. System Leakage

Leakage is not to be viewed lightly. As an indication of difficulty, the specification for full pressure suit development contracts in 1956 included stipulated maximum leakage at 100 cc/minute STP, equivalent to about 0.5 pound per 24-hour day at 3.5 psia internal pressure. Today, leakage in the suits at about double this rate is normal. It may be

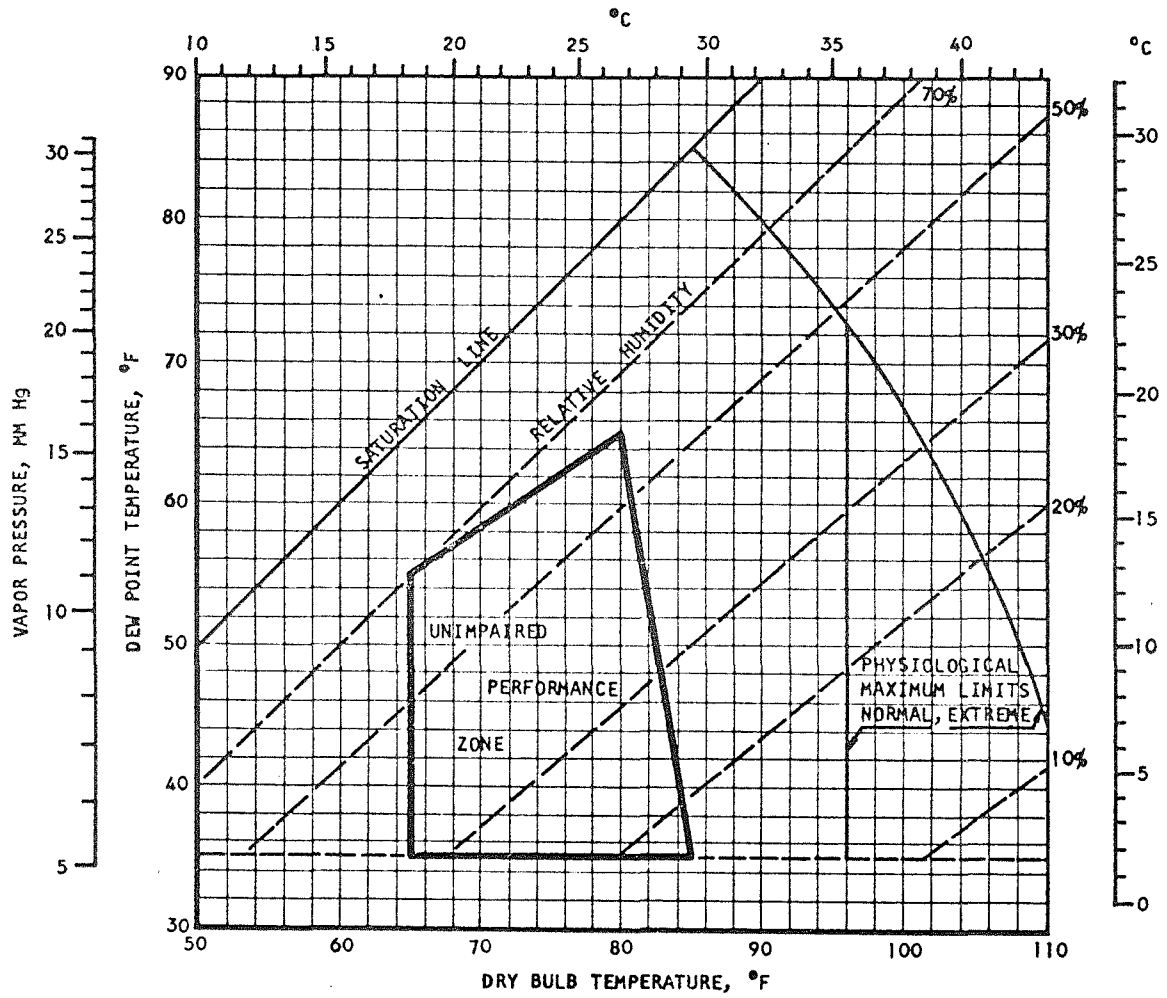

Source: The Garrett Corporation, AiResearch Manufacturing Divisions.

EXHIBIT D17 - TEMPERATURE-HUMIDITY EFFECTS

presumed that diffusion and percolation of the breathing atmosphere through the suit fabric itself is not actually zero, but that by far the major leakage occurs in various sealing areas, and that this leakage is approximately proportional to the length of the seals. In the suit, neck ring seal plus sealing zipper closure total about 7 feet; for the subject chamber the smallest opening for ready passage by the man would be 30 inches in diameter, a seal length of 8 feet.

Making the translation from the suit, with its linear seals and 3.5 psia pressure, to the chamber with an 8-foot perimeter seal and 6.25 psia pressure, the daily (24-hour) leakage would be 1.18 pounds of oxygen and 0.48 pounds of nitrogen.

To enter and leave the chamber without an airlock would entail (in an ellipsoidal enclosure 30 inches by 72 inches) loss of about 18 cubic feet of the breathing atmosphere, containing 0.422 pounds of oxygen and 0.18 pounds of nitrogen. These figures are not enough different from estimated airlock losses for Apollo to warrant consideration of an airlock for this vehicle.

h. Gas Requirements

Total oxygen and nitrogen requirements for a 12-hour period are as follows (in pounds):

Gas	Metabolic	Leakage	Vent of Chamber Volume	Purging	Pressurization(1)	Total
O_2	2.25	0.59	0.42	0.43(2)	--	3.69
N_2	--	0.24	0.18	0.38(2)	0.13(2)	0.93

Notes: (1) Reserved for pressure transfer.
(2) Identical with Apollo estimates.

To lose the chamber atmosphere several times during the work period would raise these totals as follows:

	Total Gas Requirement (pounds)					
	Number of Vents of Chamber					
Gas	1	2	3	4	5	6
O_2	3.69	4.11	4.53	4.95	5.37	5.79
N_2	0.93	1.10	1.28	1.46	1.64	1.82
Total	4.62	5.21	5.81	6.41	7.01	7.61

i. Contaminants

Assuming a continuous 48-hour duty cycle and 20 chamber vents results in a total gas requirement of 28 pounds.

In the normal atmosphere the carbon dioxide level is about 0.03 percent by volume. In the alveoli this concentration is increased in inspired air to 1 or 2 percent. This content is not objectionable or toxic up to about 5 percent in the breathing atmosphere. As a matter of fact, in this range the human system undergoes a very sensitive response to minute changes in CO_2 concentrations in the blood by altering the breathing rate. Excess carbon dioxide is removed from the system in exhaled air and through the kidneys. It is normally exhaled at the rate of 0.7 or 0.8 cubic feet (NTP) per hour (pilot data), equivalent to 0.9 pounds of CO_2 per 12-hour day.

Toxic gases and vapors are, of course, hazardous to health in widely varying proportions. An interesting list of toxic vapors and dust and the proportions in which they present a physiological danger was issued several years ago by the Navy Bureau of Medicine and Surgery. It lists, among several hundred such compounds, the decomposition products of teflon as being considered a hazard to health in concentrations of 0.001 parts per million; nitrogen tetroxide 0.005 parts per million; hydrazine 0.001 ppm; and many others.

j. Ecological System Components

The ecological system will then perform the following functions: (1) supply 3.7 to 5.8 pounds of oxygen, depending upon the number of airlock operations; (2) supply 1.0 to 1.8 pounds of nitrogen; (3) extract water from the atmosphere in amounts varying from 2 to 5 pounds; (4) remove metabolic heat which could range from 600 to 4,000 Btu per hour; (5) remove (very probably) heat from the ecological area, the excess of absorbed over reradiated thermal energy; (6) remove one pound of CO_2 from the atmosphere in the 12-hour period; and (7) absorb or destroy a number of irritating gases and vapors from the atmosphere.

Required components of the system are as follows:

(1) A temperature-regulating system capable of adding or extracting heat from the artificial atmosphere.

(2) A heat exchanger or chemical absorption system (silica gel) for maintaining the desired level of humidity.

(3) Chemical absorber for CO_2 removal. There are two possibilities here, both of which have been experimented with: the cartridge type lithium hydroxide-lithium chloride chemical absorber and the molecular sieve. The latter has the advantage of being capable of regeneration, but the energy heat requirements for this reversal process are high. For the present, at least, it appears to be more readily justifiable to use the lithium hydroxide absorber for CO_2 removal, preceded necessarily by the water removal system because of strong affinity for water in the lithium hydroxide. This absorber has a capacity of 0.88 pounds of CO_2 per pound of the hydroxide and is necessarily a disposable cartridge design.

(4) An efficient mechanical filter for removal of all solids, dust fragments of hose liners, packing and seals, hairs, etc., from the man himself, and any other objectionable particles in the air. This is most effective at the start of the air regeneration system in order to prevent accumulations at random points in the system where they could interfere with the desired fluid flow or with chemical, thermal, and other equilibria.

(5) Devices for removal of injurious vapors and gases, undesirable hydrocarbons, and other decomposition products. This may be adequately handled in some cases by a catalytic burner--perhaps a platinum catalyst. In lunar explorations this system and the mechanical filter will have to be highly developed and reliable. The presence of electrical equipment in the area and the possibility of overheating and fire are further justification for inclusion of this component.

(6) Gaseous storage of high-pressure (7,500 or 4,500 psi) and of regulated low-pressure oxygen for regeneration of this component of the breathing atmosphere. There are available 4-1/2-inch-diameter spherical steel tanks with gaseous storage capacity of one pound of oxygen each. (Oxygen storage at high pressures is not without explosion hazard.)

(7) Gaseous storage of high-pressure and regulated low-pressure nitrogen for breathing, purging, and pressurization of liquid transfers.

(8) Storage of water, including moisture recovered from the atmosphere in its regeneration. This water, if in adequate supply in the area, could be a primary heat sink in a system of evaporative coolers for the ecology.

(9) A liquid heat transfer system for thermal and humidity control in the regeneration system. It may be found necessary to provide a radiant cooler for this system. A heat pump for aid in dissipating heat from the ecology is a choice left to be resolved when the thermal equilibrium is better known.

(10) An air compressor with a low pressure ratio to overcome pressure drops.

(11) Similar pumps for the liquid heat transfer medium.

(12) Sensing devices for temperature and humidity control and a mass spectrometer for monitoring and control of the atmosphere.

(13) The necessary valves, manual and solenoid, with appropriate sensing devices, for operation of the system with a minimum of attention from the explorer.

k. Radiation Factors

As to the nominal radiation problem, there is likely to be little gamma radiation on the lunar surface, little or no electron flux, and in the remaining particulate area, nucleate material will be present as galactic cosmic energy and solar proton beams or solar cosmic beams. In space the distribution is 98 to 99 percent nucleons, with only traces of gamma and electrons. The cosmic radiation is made up of atomic materials from hydrogen (protons), helium (alpha particles), etc., up to iron, all stripped of their electrons and in general possessed of high kinetic energies. Protection against this nominal background level of radiation will be a significant constraint in the design of the chamber.

For the problem of very large and significant increase in solar flux during giant flares, there is apparently no practical design approach (mass, magnetic, or electrostatic) to provide adequate shielding of the moderately high energy nucleons. The answer may lie in a reliable prediction and warning system, so that personnel may merely retire underground, together with all equipment susceptible to such damage.

REFERENCES FOR APPENDIX D

1. Terzaghi, K., Theoretical Soil Mechanics, John Wiley, New York, 1943.

2. Winterkorn, H. F., "Macromeritic Liquids," Symposium on Dynamic Testing of Soils, ASTM Publication No. 156, pp. 77-89, 1953.

3. Taylor, D. W., Fundamentals of Soil Mechanics, John Wiley, New York, 1948.

4. Borowicka, H., "Influence of Rigidity of a Circular Foundation Slab on the Distribution of Pressures over the Contact Surface," Proceedings of the First International Conference on Soil Mechanics, Cambridge, Massachusetts, v. 2, pp. 144-149, 1938

5. Bekker, M. G., Theory of Land Locomotion, University of Michigan Press, Ann Arbor, 1956.

6. "Flight Vehicle Power Budget Climbs," Missiles and Rockets, March 26, 1962.

7. Whipple, Fred L., "The Coming Exploration in Space," The Saturday Evening Post, August 16, 1958.

8. Clarke, Arthur C., "The Uses of the Moon," Harper's Magazine, pp. 55-62, December 1961.

9. Kiess, C.C., and Lassovzski, K., The Known Physical Characteristics of the Moon and Planets, Georgetown College Observatory, ASTIA Document No. AD 115-617, July 1958.

10. Carson, A. Brinton, General Excavation Methods, F. W. Dodge Corporation, New York, 1961.

APPENDIX E

RADIATION SOURCES AND SHIELDING REQUIREMENTS

1. Introduction

The potential hazards from radiation present a major threat against the successful establishment of the manned lunar base. The base personnel must be protected from radiation from a wide variety of sources including the Van Allen belts, cosmic rays, solar flares and nuclear reactors. Although much is known about the characteristics of these sources of radiation, much still remains to be determined before appropriate protective measures can be devised.

A brief review is presented in this appendix of some of the salient known characteristics of the sources of radiation of concern. Methods for analyzing and computing particle interactions are discussed. Estimates of shielding requirements are given. Operational procedures that might be useful in minimizing exposure to radiation hazards are discussed. A summary of additional physical properties and design data needed to more accurately assess the radiation sources and to determine the shielding requirements is given.

2. Radiation Sources

There are five sources of radiation that must be considered in the evaluation of potential radiation hazards for the lunar base mission: (1) galactic cosmic rays, (2) Van Allen belts, (3) artificial belts, (4) solar flares, and (5) nuclear reactor. Although more complete discussions of existent knowledge about these radiations are presented elsewhere (see References 1-12), for purposes of this discussion a brief review is given here.

a. Galactic Cosmic Rays

The galactic background of cosmic rays has been studied for many years by means of instrumented high-altitude balloons and rocket flights. As a result of analysis and experimental

data, the primary radiation is now well defined. The particle composition consists of 85 percent protons, 13 percent alpha, and less than 2 percent higher atomic number particles which have been stripped of their electrons. These particles are at extremely high energies and therefore interact with matter in a complex fashion involving the production of mesons, nucleon cascades, nuclear evaporation, and electronic and photonic cascades. Measurements by the Pioneer V space probe (Reference 5) placed the free space flux of cosmic particles at 2.5 particles/cm^2-sec.

b. Van Allen Belts

The radiation trapped by the earth's magnetic field has been described by Van Allen in many publications (References 13-17). His proposed model of the trapped radiation is widely disseminated in the literature. Van Allen has suggested that high-energy protons and electrons passing through the earth's magnetic field become trapped and form a toroidal-shaped radiation zone surrounding the earth. Two concentric belts within this region (at about 1.1×10^4 km and 2.2×10^4 km from the earth's magnetic axis) contain highly energetic particles. Van Allen has presented a picture of these two belts as follows:

(1) Inner Belt:

protons, E>40 mev, about $2 \times 10^4/cm^2$-sec
electrons, E>20 kev, about $2 \times 10^9/cm^2$-sec-ster.
electrons, E>0.6 mev, about $1 \times 10^7/cm^2$-sec-ster.

(2) Outer Belt:

protons, E>60 mev about $1 \times 10^2/cm^2$-sec
electrons, E>20 kev about $10^{11}/cm^2$-sec
electrons, E>0.2 mev about $10^8/cm^2$-sec
electrons, E>2.5 mev about $10^6/cm^2$-sec

Complete data on energy spectra of the trapped particles and spatial distribution are yet to be obtained. The inner belt proton fluxes appear to be relatively stable in location and intensity; however, the

electron portion of the trapped radiation exhibits marked changes associated with geomagnetic storms. The Pioneer IV space probe indicated a counting rate for incident electrons which was a factor of 1,000 higher than the prestorm quiet-day observations for Explorer VI (References 18-19).

An attempt was made to measure the proton spectrum of the inner belt (Reference 9) as reported by S. Freden and R. White. The proton spectrum appeared to vary as exp (-E/120) and indicated as much as 3 protons/cm^2-sec with energies of 700 mev and about 80 protons/cm^2-sec at 100 mev.

Measurements of the radial distribution of the intensity of the radiation levels of the two belts are given in Exhibit E1.

c. Artificial Belts

The high altitude U.S. bomb test of July 9, 1962 resulted in the formation of a new radiation belt around the earth. A detailed description of the characteristics of this belt is as yet unavailable. However, the following is known (Reference 20): The intensity of this radiation belt becomes significant at a distance of 250 miles from the earth and extends radially several thousand miles. The radiation level is about 100 times that of the Van Allen belt. The total electron flux is about 10^9/cm^2-sec. The electron flux above 1 mev is about 5×10^8/cm^2-sec. The half life of this belt is on the order of months or years. These radiation levels are the result of only the bomb test of July 9, 1962, and do not include the radiation from the subsequent high altitude tests conducted by the U.S. and the USSR.

It is estimated that if an attempt were made to deliberately increase the intensity of this artificial belt with bombs designed for this purpose, the radiation level could be increased by an additional factor of a hundred to a thousand.

d. Solar Flares

The greatest potential radiation hazards encountered on the lunar mission are those resulting from solar flares.

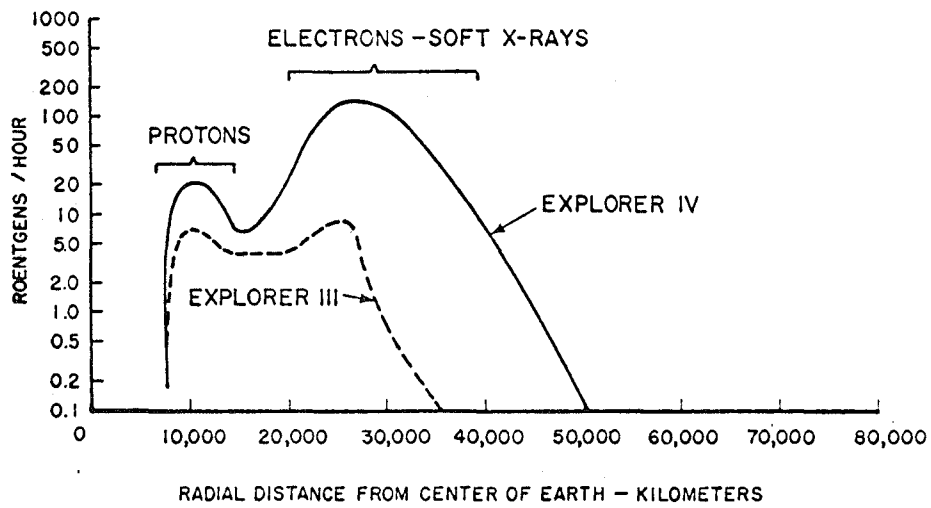

Source: L. A. Frank, Nature 184, 1959.

EXHIBIT E1 - VARIATION OF RADIATION LEVEL ALONG THE TRAJECTORY OF EXPLORER III AND EXPLORER IV

A large number of high-energy protons are generated in a solar flare. The mechanism by which these flares send protons toward the earth's geomagnetic field is still uncertain. Models for the solar proton event have been proposed by Parker (Reference 21) and by K.A. Anderson, et al. (Reference 22). The proton intensity during one of these flares grows to its maximum value one hour following the arrival of protons as signalled by the absorption of cosmic radio noise. It remains at this maximum value for 3 hours and then decays as t^{-2} (Reference 5).

About half an hour or more following some large solar flares, protons with energies typically up to 200 mev (Reference 23-24) and electrons with energies up to 100 mev (Reference 25) are detected in the polar regions inside the auroral zones. This radiation dies away with a time constant of 2 or 3 days.

Two classes of solar flares emit particles that can be detected in the vicinity of the earth and are the source of the potential radiation hazards for the lunar mission. These classes are giant flares and major flares. The giant flares are very large, emitting particles with energies in the bev range at flux level orders of magnitude above normal cosmic ray intensities (Reference 26). Only six such events have occurred in the last 19 years. The particles emitted from a major flare have a much lower energy but occur much more frequently than those from a giant flare.

The frequency of occurrence of the major and giant flares from 1947 to 1960 is shown in Exhibit E2. It can be seen from this table that the number of major flares and the number of sunspots are well synchronized in the 10-year solar cycle. However, the giant flares appear to occur in a random fashion.

Methods have been developed to predict the occurrence of major solar flares. Criteria have also been evolved to predict periods that will be free from major and giant solar flares.

K.A. Anderson (Reference 27) has developed a method by which flares can be predicted 2 to 4 days in advance with a reliability of about 95 percent. This method involves a visual monitoring of the penumbra of sunspot regions.

EXHIBIT E2 - FREQUENCY OF EVENTS PRODUCING PROTONS MEASURABLE AT THE EARTH

Year	Number of Major Flares	Number of Giant Flares
1947 (1)		0
1948		0
1949	6	1
1950	4	0
1951	4	0
1952	0	0
1953	1	0
1954 (2)	0	0
1955	0	0
1956	4	1
1957	14	0
1958 (1)	11	0
1959	6	0
1960	10	2

Notes: (1) Sunspot maximum.

(2) Sunspot minimum.

Source: Reference 29.

J. Weddel (Reference 28) has recently disclosed a new method for predicting solar flare events up to 35 days in advance. He claims that this method, which is being refined to achieve greater accuracy, has a current prediction reliability of 70 percent.

J. W. Evans et al. at Sacramento Peak Observatory have developed a technique (Reference 29) to predict 5-day periods that will be devoid of solar flares. During recent months, 70 percent of the time has been predicted to be flare free and has proven to be so.

3. Analysis of Particle Interactions

The analysis of particle interactions with an attenuating material resolves itself into an analysis of the primary particles and the attenuation of the formation of the secondary particles and/or radiations. The primary particles under consideration here are high-energy protons and low- and high-energy electrons. The secondary radiations include neutrons and protons formed by proton-nucleon interactions in the nucleus and neutron evaporation from the nucleus, and gamma rays formed by electron-electron collisions.

a. Proton Interactions

High-energy protons interact with matter in two basic ways: (a) by ionizing the material along the path, and (b) by nuclear reactions.

The average rate of ionization loss of protons is given by the Bethe-Bloch formula as

$$-\frac{dE}{dx} = \frac{2\pi n e^4 Z^2}{mv^2}\left[\ln\frac{2mv^2 W_{max}}{I^2(1-\beta^2)} - 2\beta^2 - \delta - U\right] \qquad (1)$$

where

n	=	number of electrons per cm^2 in the stopping substance
m	=	electron mass
β	=	v/c
v	=	velocity of the particle

Z	=	charge of the particle
I	=	mean excitation potential of the atoms of the substance
W_{max}	=	maximum energy transfer from the incident particle to the atomic electrons
δ	=	correction for the density effect, which is due to the polarization of the medium
U	=	the shell correction term

Some typical ranges are given below for high-energy protons in possible shield materials (Reference 30).

	Proton Range (gm/cm^2)				
Proton Energy	Beryllium	Carbon	Aluminum	Copper	Water
50 mev	2.588	2.436	2.878	3.496	2.184
100 mev	9.036	8.462	9.854	11.181	7.590
200 mev	3.056	2.854	3.284	3.894	2.558
500 mev	1.385	1.286	1.467	1.720	1.155
1,000 mev	3.865	3.570	4.055	4.721	3.215

In addition to energy losses through ionization, the protons will enter into nuclear interactions. The general principles of high-energy nuclear reactions enumerated by Serber (Reference 31) suggest a separation into two phases for the nonelastic reactions of nucleons with a nucleus. The first phase is the rapid development of a nucleonic cascade, and the second phase is the de-excitation of a thermally excited nucleus by the relatively slower process of evaporation.

The cascade develops through the incident nucleon colliding with one of the nucleons of the target nucleus and the recoil nucleons either escaping from the nucleus or individually colliding with other nucleons (in the same nucleus); the recoil nucleons from these secondary collisions either escape from the nucleus or collide with other nucleons, and so on. The cascade process is visualized as continuing until the energy of each of the individuals in the collisions becomes less than the energy required by the nucleon to escape directly from the nucleus. The entire

cascade process is estimated to take place in about 10^{-22} seconds. The directly ejected particles are often called knock-on particles.

Those nucleons that do not escape from the nucleus are assumed to share their energy with the entire residual nucleus. This leads to the second phase--namely, the de-excitation of an excited nucleus. The dissipation of this energy is conveniently treated by the statistical modes of the nucleus and the evaporation theory of Weisskopf.

b. Knock-on Phase

The first assumption that underlies the analysis of the initial interactions in high-energy reactions is that the motion of the incident nucleon within the target nucleus can be treated in terms of a succession of two-body collisions between the incident nucleon and the individual nucleons in the target nucleus, and that the subsequent motion of the struck nucleons can be treated in the same way (multiple scattering). Further, if the energy of the incident nucleon or of the struck nucleons in the nucleus is high enough, it is assumed that these collisions can be considered as collisions between free nucleons (impulse approximation). Thus, the incident nucleon generates an intranuclear cascade, and the problem becomes a stochastic one in which each step is described by the properties of nucleon-nucleon collisions within nuclear matter. The fact that the collisions occur within nuclear matter manifests itself through the Pauli principle (collisions leading to occupied states are forbidden), the momentum distribution of the nucleons in the nucleus, and the change in the kinetic energy of the incident nucleon as it crosses the nuclear boundary.

The validity of these assumptions has been examined in detail by Lax, Chew, and coworkers, and by Ashkin and Wick (Reference 32). Intuitively, though, it is clear that these assumptions require that the wavelength of the fast nucleon (its effective size) should be small compared with the internucleon distance in the nucleus, and that the kinetic energy of the fast nucleon should be large compared with the potential energy felt by nucleons within nuclear matter. These requirements are doubtless met by nucleons with energies in excess of 100 mev.

If the motion of the incident nucleon within the struck nucleus is treated classically, then, as shown by Fernbach, Serber, and Taylor (Reference 33), the inelastic cross section for a high-energy particle incident upon a nucleus with a sharp boundary may be expressed in terms of the nuclear radius R and the mean free path of the incident particle in nuclear matter, λ, as

$$\sigma = \pi R^2 \left[1 - \frac{(1+2\frac{R}{\lambda}) \exp(-2\frac{R}{\lambda})}{2\frac{R^2}{\lambda^2}} \right] \quad . \tag{2}$$

Under the impulse approximation, the mean free path is given in terms of the effective cross section for the interaction of the incident particle with neutrons, $\bar{\sigma}_{pn}$ and with protons, $\bar{\sigma}_{pp}$,

$$\lambda = \frac{\frac{4}{3}\pi R^3}{Z\bar{\sigma}_{pp} + N\bar{\sigma}_{pn}} \quad . \tag{3}$$

These effective cross sections differ from the free-nucleon cross sections because of two factors: (1) the Pauli exclusion principle, which makes occupied states inaccessible after scattering, and (2) the momentum distribution of the nucleons within the nucleus. These two points have been fully discussed by Goldberger (Reference 34).

All analyses of particle evaporation from excited residual nuclei remaining after the intranuclear cascade have used the statistical assumption and formalism first developed by Weisskopf (Reference 35) for the compound nucleus model of Bohr (Reference 36). These analyses, then, start with the well-known expression of Weisskopf for the probability per unit time that a particle of type i with binding energy B_i and spin s_i is emitted in the energy interval $d\epsilon_i$ at an energy ϵ_i from a nucleus with excitation U

$$W(\epsilon_i)d\epsilon_i = \frac{2s_i+1}{\pi^2\hbar^3} \mu_i\sigma_i(\epsilon_i)\epsilon_i \frac{\rho'(U-B_i-\epsilon_i)}{\rho(U)} d\epsilon_i \tag{4}$$

where

$\rho(U)$ = density of energy levels of the original nucleus at excitation energy U

$\rho'(U-B_i-\epsilon_i)$ = density of energy levels of the nucleus remaining after the emission of particle i with kinetic energy ϵ_i

μ_i = reduced mass of the system after emission

$\sigma_i(\epsilon_i)$ = cross section for the exact inverse on the emission process

The expression for $\rho(U)$ is generally taken as

$$\rho(U) = \frac{e^s}{\tau(2\pi \frac{dU}{d\tau})^{\frac{1}{2}}} \quad . \tag{5}$$

where τ is the nuclear temperature, s is the entropy, and U is often taken as

$$U = a\tau^n \quad . \tag{6}$$

This expression, together with the thermodynamic definition of temperature, gives

$$s = \frac{n}{n-1}(aU^{n-1})^{1/n} \quad . \tag{7}$$

Dostrovsky et al. (Reference 37) have used the evaporation model together with the Monte Carlo method to evaluate the average number of the various types of particles emitted from highly excited nuclei. Dostrovsky's calculations are quite useful in predicting the energy spectrum of the initial particles and their number distribution.

c. Electron Interactions

Electrons passing through matter lose energy by ionization and excitation of the atomic electrons of the medium in the same manner as heavy particles. The expression for the ionization loss is given below.

$$-\frac{1}{\rho}\frac{dE}{dx} = \frac{2\pi ne^4}{mv^2\rho}\left\{\ell n\frac{mv^2T_e}{2I^2(1-\beta^2)} - [2(1-\beta^2)^{1/2} - 1 + \beta^2]\ell n2 + 1 - \beta^2 + \frac{1}{8}[1-(1-\beta^2)^{1/2}] - \delta\right\} \tag{8}$$

The electron, in addition to ionizing the stopping material, will interact with the electromagnetic field of the nucleus producing photon radiation referred to as bremsstrahlung. The photon flux can be represented by $\varphi_{rad}(E, E_\gamma)dE_\gamma dx$ which is the probability of emitting a photon with energy in the interval dE_γ at E_γ.
Therefore,

$$\varphi_{rad}(E, E_\gamma)dE_\gamma dx = 4\alpha\frac{N}{A}Z^2r_e^2\frac{dE_\gamma}{E_\gamma}F(U, v) \tag{9}$$

where

$$F(U, v) = [1 + (1-v^2) - \frac{2}{3}(1-v)]\ell n183Z^{-1/3} + \frac{1}{9}(1-v) \quad . \tag{10}$$

The cross section per atom for producing photons of energies between k and k+dk is

$$\frac{Kd\sigma(K, E_0)}{dK} = \frac{Z^2r_o^2}{137}\frac{P}{P_o}\left\{\frac{4}{3} - 2E_oE\left(\frac{P^2+P_o^2}{P^2P_o^2}\right) + \frac{f_oE}{P_o^3} + \frac{fE_o}{P^3} - \frac{ff_o}{P_oP} + L\left[\frac{8E_oE}{3P_oP} + \frac{K^2(E_o^2E^2 + P_o^2P^2)}{P_o^3P^3} + \frac{K}{2P_oP}\left\{\left(\frac{E_oE+P_o^2}{P_o^3}\right)f_o - \left(\frac{E_oE+P^2}{P^3}\right)f + \frac{2KE_oE}{P^2P_o}\right\}\right]\right\} \tag{11}$$

where

$$L = \left[2\ell n\frac{E_oE + P_oP - 1}{K}\right]$$

$$f_o = \ell n\left(\frac{E_o+P_o}{E_o-P_o}\right), \quad f = \ell n\left(\frac{E+P}{E-P}\right)$$

$$E_o = T_o + 1, \; E = E_o - K = T + 1$$

$$P_o = [T_o(T_o + 2)]^{\frac{1}{2}}, \; p = [T(T + 2)]^{\frac{1}{2}}$$

E_o and E are the initial and final energy of the electron in a collision, in mc^2 units. T_o and T are the initial and final kinetic energy of the electron in a collision, in mc^2 units.

K = energy of the emitted photon in mc^2 units.

Z = the atomic number of the stopping material.

r_o = the classical radius of the electron 2.82×10^{-13} cm.

d. Secondary Particle Interactions

The cascade particles mentioned earlier will consist primarily of neutrons and protons. The secondary protons will again lose energy by ionization of the attenuating medium accompanied by nuclear collisions and radiative Coulomb field interaction.

The neutrons produced only lose energy through nuclear interactions, and at high energies (10-50 mev) have large mean free paths of the order of 25-30 gm/cm^2 or more in carbon. More work is still needed to adequately determine neutron attenuation through various materials when the initial neutron energies are of the order of 20 to 50 mev. In this regard, Monte Carlo techniques are an indispensable tool.

Calculations previously made by Allen et al. (Reference 38) indicate that for carbon, with shield thicknesses greater than about 15 gm/cm^2, the secondary protons become the controlling factor in biological shielding considerations. For other shield materials such as aluminum, magnesium, and beryllium, the secondaries become controlling at about 20 gm/cm^2. For this reason, any shielding analysis other than order of magnitude calculations must include a detailed calculation of the secondary energy spectrum and angular distribution as a function of shield thickness.

e. Development of Mathematical-Numerical Model

The calculation of the primary proton and electron ionization losses, although requiring lengthy numerical calculations,

are easily programmed and will not be dwelt on here. The equations have already been presented in the previous sections.

The bremsstrahlung photons are a bit more involved in that a numerical integration technique is required to obtain receptor dose rates, but here again, existing Fortran functional subroutines are available to facilitate coding such problems. The expression to be solved is of the form

$$D = C_1 \int_0^t \int_{K_{min}}^{K_{max}} \int_{K+1}^{E_{o\,max}} \frac{K}{Z^2} \frac{d\sigma(K, E_o)}{dK} \frac{N(E_o, x)}{S(E_o)} F_g(K) A(K, t-x)\, dE_o\, dK\, dx \quad (12)$$

where

$C_1 = \dfrac{0.261 N_o Z^2}{A}$

A, Z = atomic weight and number of the stopping material

N_o = Avogadro's number

K = energy of photons

E_o = electron energy

$\dfrac{d\sigma(K, E_o)}{dK}$ = differential bremsstrahlung cross section

$N(E_o, x)$ = integral electron spectrum for electrons above energy E_o at distance x within stopping medium

$S(E_o)$ = stopping power for electrons of total energy, $E_o = T_o + 1$

$F_g(K)$ = gamma ray flux-to-dose conversion factor

$A(K, t-x)$ = dose attenuation function for photons of energy K and shield thickness $(t-x)$

and

$$A(K, t-x) = B[\mu_K(t-x)]e^{-\mu_K(t-x)G} \quad (13)$$

where μ_K = the linear absorption coefficient

$B[\mu_K(t - x)]$ = the dose buildup factor

G = the geometrical correction factor

The calculation of the secondary protons and neutrons due to nucleon-nucleon scattering and evaporation present a need for sophisticated probabilistic analyses and the application of nuclear physics. The physical processes involved in high energy proton-nucleon interactions were summarized previously. Because of the multiple scattering processes within the nucleus, the Monte Carlo method must be used to follow the nucleon cascade.

A very brief outline of a possible numerical approach is discussed below.

The distance through which the primary proton travels before interacting with a nucleus of the stopping material is given by x_o, where x_o is related to the random variable y (with uniform distribution between 0 and 1) by the relationship

$$y = \int_{o}^{X_o} \Sigma(E(x))e^{-\int_{o}^{X_o} \Sigma(E(x))dx} dx \qquad (14)$$

where $\Sigma(E(x))$ is the macroscopic collision cross section related to x by the equation

$$X = \int_{E(x)}^{E_o} \frac{dE}{s(E)} \qquad (15)$$

where

$$s(E) = -\frac{dE}{dx} = \frac{2\pi n Z^2 e^4}{mv^2}\left[\ln \frac{2mv^2 W_{max}}{I^2(1-\beta^2)} - 2\beta^2 - \delta - U\right] . \qquad (16)$$

Equation (16) is the Bethe-Bloch formula discussed earlier.

Equation (15) would be solved numerically to obtain the correspondence between E and x. With this relationship established,

Equation (14) can be solved numerically, and by iteration a value of x_o can be obtained which satisfies Equation (14).

Using Equations (14), (15), and (16), the path length to the first collision can be chosen. Of course a collision may not occur at all, in which case the proton will continue to the end of its range (no collision will occur if x, chosen by the random variable y, is greater than the proton range R).

Once a collision occurs, the proton will enter the nucleus and a second random variable will choose the path length to the first nucleon collision.

Chew and Wick have applied the impulse approximation to obtain the mean free path for nucleons within the nucleus. They limit the application to those cases where all of the following assumptions hold:

(1) The incident particle interacts with one single nucleon at a time.

(2) The amplitude of the incident wave is not appreciably diminished in crossing the nucleus.

(3) The binding forces between constituents of the system are negligible during the decisive phase of the collision when the incident particle interacts strongly.

Wattenberg (Reference 39) summarizes the Monte Carlo methods as explained by Goldberger, Bernardini et al., and Morrison. A brief description of the method as it would be applied is presented here.

The distance to the first collision is obtained by the relation

$$y = \int_0^x \lambda e^{-\lambda x} dx \tag{17}$$

where λ as given by the impulse approximation is

$$\lambda = \frac{4/3\,\pi R^3}{Z\bar{\sigma}_{pp} + N\bar{\sigma}_{pn}} \quad . \tag{18}$$

The next problem is to choose the momentum of the nucleon (in the target) which has been struck. The Fermi momentum sphere with a square well potential and uniform particle density yields a degenerate gas excitation energy of

$$E = \frac{A\hbar^2}{2MR^2} \tag{19}$$

and the level density is given by:

$$\rho(U) = \frac{1}{\tau \left(2\pi \frac{dU}{d\tau}\right)^{1/2}} \exp\left(\sqrt{2aE}\right) \tag{20}$$

where A = the number of particles in the sphere of radius R

M = the mass of a nucleon

a = an experimental constant

$U = a\tau^n$

n = 2 for noninteracting Fermi gas

The momentum intervals must be equally subdivided, taking into account the probability for a nucleon-nucleon collision for particles of various momenta with the incoming proton.

Wattenberg next suggests obtaining the scattering angle. Here, one has to weight the solid angle in the center of gravity system by the differential cross section. Kinematics then determines the final momenta of the collision partners. At this point, one may find that the final momentum of one of the nucleons lies in the already occupied Fermi momentum sphere. If this is the case, the collision is forbidden, and the trajectory of nucleon number one is continued by choosing a new path length from the point of the forbidden collision. After a successful collision is obtained with permissible momenta, both of the partners are followed through the previously described steps until each particle involved in a collision escapes from the nucleus or is captured in the potential well. The process is then repeated with a second incoming proton, etc. Such calculations, in addition to predicting the spectrum of

excited nuclei remaining after the intranuclear cascade, will also give the differential cross sections for the energy and angular distributions of the knock-on particles.

The evaporation of neutrons following the knock-on phase is calculated by similar techniques but will not be detailed here. The method has been outlined in the literature by Dostrovsky et al. (previously cited).

The data obtained from the Monte Carlo analysis of knock-on particles and evaporation neutrons can be used to obtain a proton and neutron spatial-angular-energy distribution which can be used, normalized to a new source sample (of about 1,000 Monte Carlo particles) size. The secondaries can then be followed through the remainder of the shield using known collision cross sections, etc., in a new Monte Carlo cycle. These calculations will be used to obtain an effective removal cross section for the neutrons and an effective shield thickness and range for the secondary protons as a function of total shield thickness.

The neutron attenuation kernel will be of the form

$$\varphi_N(t,E) = \int_0^t \int_{E_{min}}^{E_{max}} K(E,t-x)\,\varphi_N(E(x(E_o)))\,e^{-\Sigma_R(t-x)}\,e^{-\int_0^x \Sigma_p(x(E_o))dx}\,P(E_o)dE_o dx \tag{21}$$

$\varphi_N(E(x(E_o)))$ is the neutron flux at x due to an incident primary proton at initial energy E_o as determined by Monte Carlo analysis

$\Sigma_R(t-x)$ is the removal cross section for neutrons with energy $E(x(E_o))$ as determined by Monte Carlo analysis

$K(E,t-x)$ represents a correction factor for the angular distribution as obtained from the same Monte Carlo runs used to obtain $\varphi_N(E(x(E_o)))$

$$K(E,\,t-x) = \frac{\int_o^{\Omega_1} \left[\frac{d\varphi(E,\Omega)}{d\Omega}\right] d\Omega}{4\pi \int_o \left[\frac{d\varphi(E,\Omega)}{d\Omega}\right] d\Omega} \tag{22}$$

where

$\frac{d\varphi(E,\Omega)}{d\Omega}$	is obtained from the previously mentioned Monte Carlo runs
Ω_1	is the solid angle subtended by the receptor
t	is the total shield thickness
E_{min}, E_{max}	are the minimum and maximum proton energies considered
$\Sigma_p(x(E_o))$	is the primary proton nuclear collision cross section as a function of $x(E_o)$
$P(E_o)dE_o$	is the primary proton incident spectrum in dE_o

The neutron dose then becomes

$$D = \int_o^{E_N} \varphi_N(t,E)\,F(E)dE \tag{23}$$

where

$F(E)$ is the flux-to-dose conversion

E_N is the maximum neutron energy at the receptor

The proton effective range and shield thickness will be obtained by Monte Carlo analysis of the secondary proton spatial and energy distribution. The proton flux at the receptor will be given by

$$\varphi_p(t,E) \int_0^{\Omega_1} \frac{d\varphi_p(t,E,\Omega)}{d\Omega}\, d\Omega \tag{24}$$

where

$\varphi_p(t,E)$ is the secondary proton flux at the receptor.

The dose due to the secondary protons is then

$$D = \int_0^T \int_{E_{min}}^{E_p} \varphi_p(t,E)\,S'(E)F_p(E)dEdx \tag{25}$$

where

E_{min}, E_p	are the proton minimum and maximum energies incident on the receptor
$S'(E)$	is the stopping power of tissue for protons of incident energy
$F_p(E)$	is the conversion factor for linear energy transfer to dose in tissue
T	is the receptor tissue thickness

The calculation of the bremsstrahlung dose is obvious from the discussion in the analytical section.

f. Application of Computer Codes

Much work has already been done in the application of computer techniques to nuclear interactions and radiation attenuation. Generalized Monte Carlo codes are available which may be adaptable to the space shielding problem. Such codes as FMC-N and FMC-G (Reference 40) and SCAT 4 (Reference 41) may be useful aids. Monte Carlo biasing techniques to produce more valid statistics for given sample sizes should be investigated and suitable biasing techniques developed. Although the use of expectation values has been shown to give reasonable statistics for 10 to 15 mean free paths with sample sizes of 1,000 particles, perhaps other techniques such as importance sampling could increase the efficiency of the method and reduce machine time to less than one-half hour (IBM 7090 time) for a given shield system.

g. Analysis and Evaluation of Tissue Attenuation

With the possible incidence of high-energy particles on human tissue, it becomes necessary to examine the validity of the more conventional means of evaluating biological damage. Unlike lower energy radiations, the tissue damage from high-energy protons will be spread over a significantly small volume along its path. Indications are that such sensitive areas as the hypothalamus of the brain and the cerebral cortex of the brain remain relatively undamaged by extremely high doses to relatively small tissue volumes. Experiments by Zeman, Curtis,

Gebhard, and Haymaker (Reference 42) were undertaken in which they used the brain of a mouse as the experimental tissue. The microbeam consisted of deuterons collimated in a beam whose diameter could be varied from 25 microns to one millimeter. It was found that with a large beam diameter, a dose of 14,000 rads will cause almost complete destruction of cells of the cerebral cortex while at a beam diameter of 25 microns, more than 400,000 rads were required to achieve the same damage. This phenomenon, along with other studies, is required to assess more accurately the biological damage due to the incidence of shielded space radiation. Perhaps a Monte Carlo analysis of the particles incident on receptor tissue and calculation of secondary production in the tissue might lead to more accurate radiation biological equivalent (RBE) values for the incident radiations.

The effectiveness of partial body shielding requires further insight into the relative body damage caused by particular organ damage. The possibility of increasing biological resistance to radiation by pre-irradiation or chemical therapy should be investigated.

4. Shielding Requirements

The designs of the various shields needed for the lunar base mission depend on (1) the radiation tolerance dose of the personnel, (2) the spacecraft trajectory path and the velocity through the radiation belts, (3) the intensity and frequency of the various sources of radiation, (4) the time of the solar activity cycle, (5) the ability to predict solar-flare free times, (6) the characteristics of available lunar materials suitable for shielding, and (7) the availability of favorable lunar site locations.

The manner in which these factors influence the shield design is discussed here.

a. Radiation Tolerance Dose

For the purposes of this study and in accordance with recommendations made at the conference on radiation problems in manned space flight (Reference 43), the tolerance level for radiation to the lunar base personnel will be assumed to be 25 rem for an acute dose and 100 rem for the accumulative (chronic) dose (see Exhibit E3).

Measurements made by J.R. Winkler (Reference 43) of the shielding effect of the earth's atmosphere on the radiation from a solar flare are shown in Exhibit E6. From these curves it can be seen that the radiation dose is roughly proportional to $1/p^{1.5}$, where p is the density of the atmospheric shield.

In order to try to establish rough limits of the shielding requirements for a lunar mission imposed by these major flares, a set of calculations was made, and they are presented below in Exhibit E7. The values in this table were computed by using the shielding requirements given in Exhibit E6 and by assuming that the radiation dose is proportional to $p^{-1.5}$ or

$$\frac{r_a}{r_b} = \frac{p_b^{1.5}}{p_a^{1.5}}$$

where r_a is the radiation that penetrates a shield p_a thick and r_b is the radiation that penetrates a shield p_b thick.

During the last solar cycle, the number of major flares occurring per year varied from none in the years of minimum solar activity to

EXHIBIT E7 - ESTIMATES OF SHIELDING REQUIREMENTS TO REDUCE RADIATION FROM MAJOR AND GIANT FLARES TO 25 REM

Number of Flares	Rem per Flare	Shielding (gm/cm^2)			
		Major Flare		Giant Flare	
		Low	High	Low	High
1	25	6	50	50	400
2	12.5	9.5	80	80	600
4	6.3	16	130	130	1,000
10	2.5	46	240		
25	1	51	440		

Source: NASA TN-D 681.

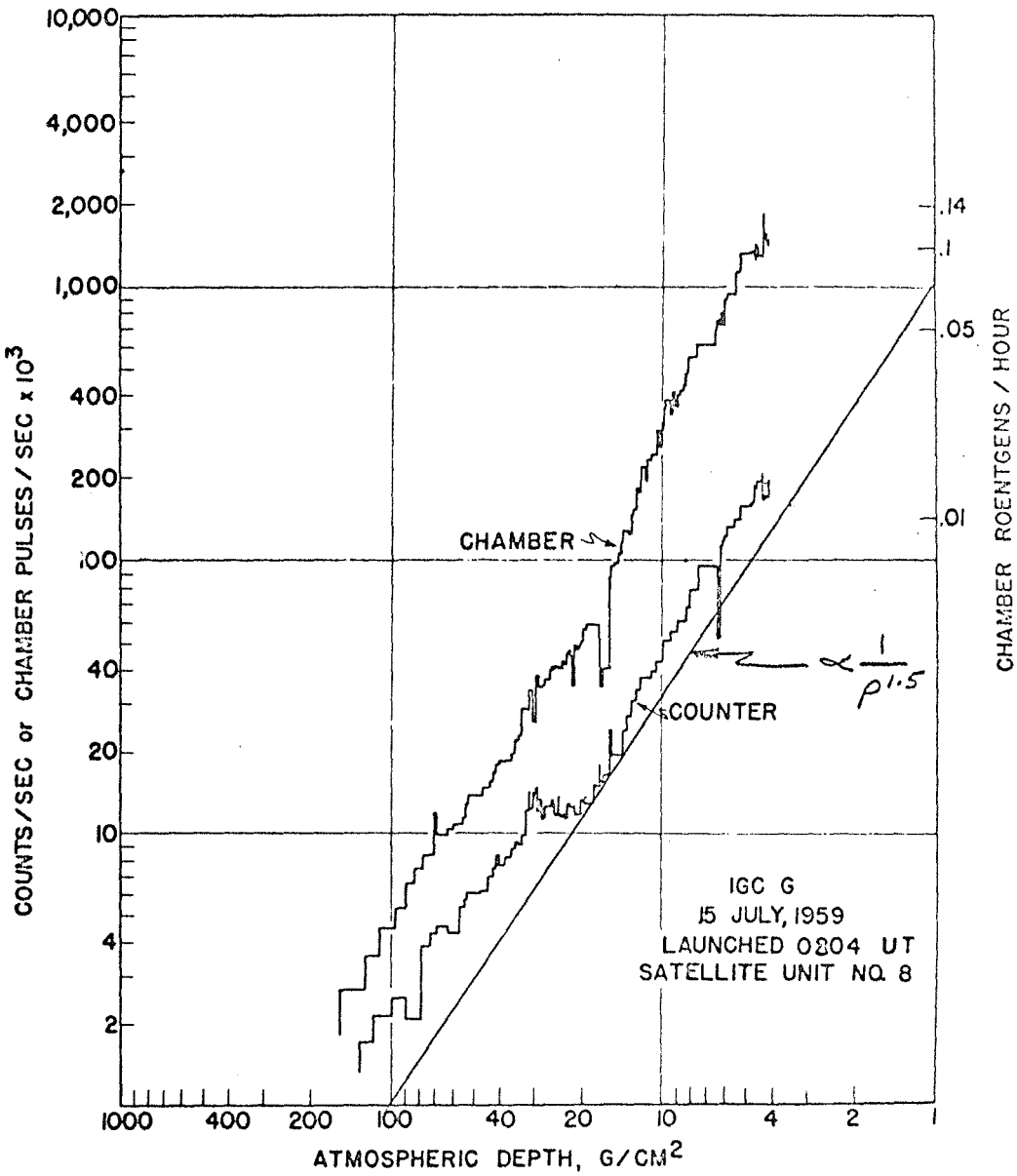

Source: NASA TN D-588.

EXHIBIT E6 - ALTITUDE DEPENDENCE DURING A PERIOD OF HIGH INTENSITY

14 in the year of maximum activity. Giant flares occur about once every four years. But two giant flares occurred in 1942 and two others in 1960.

From Exhibit E7 it can be seen that the shielding required to reduce the accumulated dose of 4 giant flares to 25 rem is 130 to 1,000 grams/cm^2; 1,000 grams/cm^2 may be considered as an upper limit for the shielding requirement and can be considered to be the shielding required to withstand twice the radiation from two giant flares. A safety factor of two was selected to take care of the radiation from concurrent major and small flares.

From Exhibit E7, it can be seen that 6 to 50 grams/cm^2 are required to reduce the radiation level of a major flare to 25 rem. This might be considered to be adequate shielding protection at a lunar base during a period of minimum solar activity, assuming one flare or less per year. It would also be assumed to be the shielding protection needed by a vehicle that might encounter one major flare during a trip.

(2) Galactic Cosmic Rays

The unshielded radiation from galactic cosmic rays is 1.4 rem/week (Reference 44). Thin shields are ineffective against galactic cosmic rays. A shield mass density of about 80 grams/cm^2 is required to reduce the galactic cosmic radiation dose by a factor of two below the unshielded dose.

(3) Meteorites and Miscellaneous Radiation Sources

Protection must be provided against damage from meteorites showering the lunar base. The meteorites can pierce, erode, and change surface characteristics of unprotected equipment. It is estimated (Reference 45) that 1,000 meteorites/square meter/day bombard the moon's surface. A half of a percent of these particles are sufficiently energetic to pierce a sheet of stainless steel .010 inch thick.

The radiation dose from lunar radioactivity (Reference 46) is only .5 millirems/week and hence can be considered to be negligible.

Provisions should be made to protect the eyes and skin of the personnel against excessive exposure to the moon background X-rays and

gamma rays. Radiation will probably be sufficiently intense to discolor normal glass, and provisions must be made for this exigency.

d. Lunar Base Site Selection

The over-all shielding requirements can be drastically reduced if a site can be selected to take advantage of the natural topography of the moon such as the shadow of a mountain or a cave.

5. Requirements for Additional Information

The following additional data must be obtained before the shielding for the lunar mission can be accurately designed.

a. Radiation Tolerance Dose

The biological damage caused by very high energy particles is poorly understood. Data are needed to establish RBE and over-all tolerance levels.

The synergistic effects of weightlessness, vibrations, and radiation must be investigated.

The possibility of increasing biological resistance by chemical therapy should be explored.

b. Solar Flares

Detailed statistical information is needed about the intensity, spectra, frequency, and directional characteristics of solar flares. This information should be developed from measurements made beyond the influence of the earth's magnetic field.

The relevant very high energy reaction cross sections and the analytical and computing techniques must be developed for use in computing the attenuation of particles from solar flares through the prospective materials of interest.

The capability to predict periods of solar flare activity and periods free from solar flare activity must be improved.

c. Lunar Composition

The biological shields will be formed, in part, from lunar material. Therefore, the chemical composition and the density of the materials available near the site of prospective lunar bases must be determined.

REFERENCES FOR APPENDIX E

1. Listrow, Robert (editor), "Symposium on the Exploration of Space," Journal of Geophysical Research, v. 64, no. 11, November 1959

2. Winkler, J.R., "Balloon Study of High Altitude Radiations During the International Geophysical Year," Journal of Geophysical Research, v. 65, no. 5, May 1960

3. Peters, B., "Progress in Cosmic Ray Research Since 1947," Journal of Geophysical Research, v. 64, no. 2, February 1959

4. Rossi, Bruno, "Scientific Results of Experiments in Space," Transactions, American Geophysical Union, v. 41, no. 3, September 1960

5. Winkler, J.R., Primary Cosmic Rays, a paper presented at the Radiation Research Society Symposium, May 1960

6. Van Allen, J.A., and L.A. Frank, Radiation Measurements to 658, 300 km with Pioneer IV, State University of Iowa Report SUI-59-18, August 1959

7. Arnoldy, R.L., R.A. Hoffman, and J.R. Winkler, "Observations of the Van Allen Radiation Regions During August and September 1959, Part 1," Journal of Geophysical Research, v. 64, no. 11, November 1959

8. Rothwell, P., and C.E. McIllwain, "Magnetic Storms and the Van Allen Belt-Observations from Explorer IV," Journal of Geophysical Research, v. 65, no. 3, March 1960

9. Freden, S.C., and R.S. White, "Particle Fluxes in the Inner Radiation Belt," Journal of Geophysical Research, v. 65, no. 5, May 1960

10. Anderson, K.A., "Solar Particles and Cosmic Rays," Scientific American, v. 202, no. 6, June 1960

11. Ried, G.C., and Leinbach, "Low Energy Cosmic Ray Events Associated with Solar Flares," Journal of Geophysical Research, v. 64, no. 11, November 1959

12. Ney, E.P., J.R. Winkler, and P.S. Frier, "Protons from the Sun on May 12, 1959," Physical Review Letters, v. 3, no. 4, 1959

13. Van Allen, J.A., "The Geomagnetically Trapped Corpuscular Radiation," Journal of Geophysical Research, v. 64, pp. 1683-1689, 1959

14. Van Allen, J.A., and L. Frank, "Radiation Around the Earth to a Radial Distance of 107,400 km," Nature, v. 183, pp. 430-434, 1959

15. Van Allen, J. A., On the Radiation Hazards of Space Flight, State University of Iowa Report SUI-59-7, 1959

16. Van Allen, J.A., "The Nature and Intensity of the Cosmic Radiation," pp. 239-266 of Physics and Medicine of the Upper Atmosphere, edited by C.S. White and O.O. Benson, Jr., University of New Mexico Press, 1952

17. Van Allen, J.A., "Auroral Particles and Soft Radiation," IGY World Data Center A, IGY Rocket Series, no. 1, pp. 159-163, 1958

18. Fan, C.Y., P. Meyer, and J.A. Simpson, Trapped and Cosmic Radiation Measurements from Explorer VI, First International Space Science Symposium, North Holland, Amsterdam, 1960

19. Arnoldy, R., R. Hoffman, and J.R. Winkler, Observations of Van Allen Radiation Regions During Geomagnetic Storms, First International Space Science Symposium, North Holland, Amsterdam; also, "Observations of the Van Allen Radiation Regions During August and September, 1959, Part I," Journal of Geophysical Research, v. 65, pp. 1361-1376, 1960

20. Denney, J.M., Los Angeles ANS Meeting, October 1962

21. Parker, E.N., "Plasma Instability in the Interplanetary Magnetic Field," in The Plasma in a Magnetic Field, R.K.M. Lanshoff, editor, Stanford University Press, Stanford, 1958

22. Anderson, K.A., R. Arnoldy, R. Hoffman, L. Peterson, and J.R. Winkler, "Observations of Low-Energy Solar Cosmic Rays from the Flare of 22 August 1958," Journal of Geophysical Research, v. 64, pp. 1133-1147, 1959

23. Rothwell, P., and C. McIllwain, "Satellite Observations of Solar Cosmic Rays," Nature, v. 184, pp. 138-140, 1959

24. Frier, P.S., E.P. Ney, and J.R. Winkler, "Balloon Observations of Solar Cosmic Rays on March 26, 1958," Journal of Geophysical Research, v. 64, pp. 685-688, 1959

25. Barnes, T.G., E.M. Finkelman, and A.L. Barzotti, "Radiation Shielding of Lunar Spacecraft," Astronautical Sciences Review, pp. 11-17, January-March 1961

26. Meyer, P., E.N. Parker, and J.A. Simpson, "Solar Cosmic Rays of February, 1956, and Their Propagation Through Interplanetary Space," Physical Review, pp. 768-783, 1956

27. NASA TN D-700, Anderson, K.A., Preliminary Study of Prediction Aspects of Solar Cosmic Ray Events, April 1961

28. Weddel, J., Symposium on Protection Against Radiation Hazards In Space, Gatlinburg, Tennessee, November 5-7, 1962

29. Dugas, D.J., Solar Flare Radiation and Manned Space Flight, The RAND Corporation, RM 2825, November 1961

30. Rich, M., and R. Madley, Range-Energy Tables, University of California Radiation Laboratory Report 230, March 1954

31. Serber, R., Physical Review, v.72, p.1144, 1947

32. Annual Review of Nuclear Science, v.9, p.163, 1959

33. Fernbach, S., R. Serber, and T.B. Taylor, Physical Review, v.75, p.1352, 1946

34. Goldberger, M.L., Physical Review, v.74, p.1268, 1948

35. Weisskopf, V., Physical Review, v.52, p.295, 1937

36. Bohr, N., Science, v.86, p.161, 1937

37. Dostrovsky, I., P. Rabinowitz, and R. Bivins, Physical Review, pp.111, 1659, 1958

38. Allen, R.I., A.J. Dessler, J.F. Perkins, and H.C. Price, Shielding Problems in Manned Space Vehicles, First Semiannual Report, Lockheed Aircraft Corporation, Georgia Division, NR-104 July 1960

39. Handbuch Der Physic, edited by S. Flugge, v.XL, Nuclear Reactions I

40. Loecher, J.J., and J.E. MacDonald, Flexible Monte Carlo Programs, FMC-N and FMC-G Apex 706, April 28, 1961

41. Melkanoff et al., A Fortran Program for Elastic Scattering Analyses with the Nuclear Optical Model, University of California Publications in Automatic Computation No. 1, University of California Press, 1961

42. Zeman, W., H.J. Curtis, E.L. Gebhard, and Haymaker, Science, v.130, p.1760, 1959

43. NASA TN D-588, Proceedings of Conference on Radiation Problems in Manned Space Flight, Washington, D.C., 21 June 1960

44. De Nike, J., and S. Zahn, "Lunar Basing," Aerospace Engineering, v.21, no.10, October 1962

45. Broner, M.A. and G.A. Lander, Space/Aeronautics, April 1962

46. Barton, I.A., 6th National AAS 1-60