Enabling Science at the Moon

NASA Advisory Council Astrophysics Subcommittee
Tempe, AZ
February 28, 2007

Pete Worden, Ames Research Center Director
Michael Bicay, ARC Director of Science
Yvonne Pendleton, ARC Chief of Space Science Division
Jennifer Heldmann, ARC Space Science Division

Astronomy from the Moon

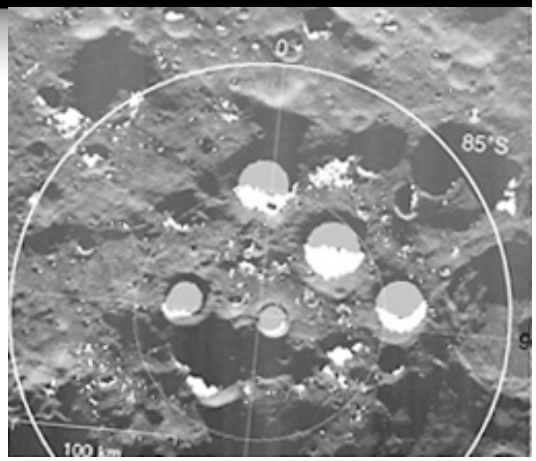

In general, the Moon offers advantages for Radio Astronomy, while free space offers greater advantage for UVOIR; small satellite missions (in orbit and as landers) can provide *priority* science data *inexpensively*.

- **Instruments that analyze the physical and chemical properties of dust will be of value both for Science (fundamental research) and Exploration (applied to risk mitigation for machines/humans).**
- **Early establishment of a lunar communication/navigation satellite system that enables contact from Earth with the entire lunar surface at any time useful for both the near-term robotic missions and future human exploration.**
- **Investment in Data Analysis of lunar data from these large and small missions (LRO, LCROSS, small sats, etc.) will yield assessment tools, techniques, and experienced students all applicable to future destinations!**

Small Satellite Missions

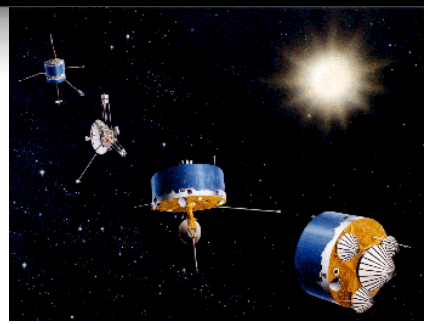

- NASA Ames Research Center, Goddard Space Flight Center and collaborators are formulating a coordinated series of low-cost lunar orbiters and landers
- Small satellite science requires a mission philosophy of rapid development timescales and the use of commercial-off-the-shelf components.
- Schedule compression and use of heritage should make it possible to implement a series of low-cost small satellite launches every six months.
- Small 0.5- 1.0 m telescopes and other components could be delivered via small landers carrying a few tens of kgs. Transit search science and general site survey information easily gathered this way.

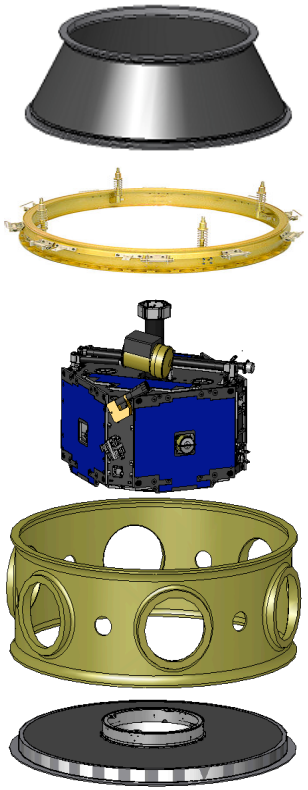

Lunar Science Orbiter

A low-cost orbiter to systematically explore surface composition using ion mass spectrometer capable of detecting the presence of water in all areas, will characterize dynamic processes causing lifting/transport of lunar dust, and study the dependence of this activity on solar illumination and the local space environment. (100M, 50kg, Minotaur launch)

LSO will characterize radiation through total integrated dose and solar energetic particle measurements. It can also carry a novel biology experiment that will examine the impact of both radiation and microgravity on living systems.

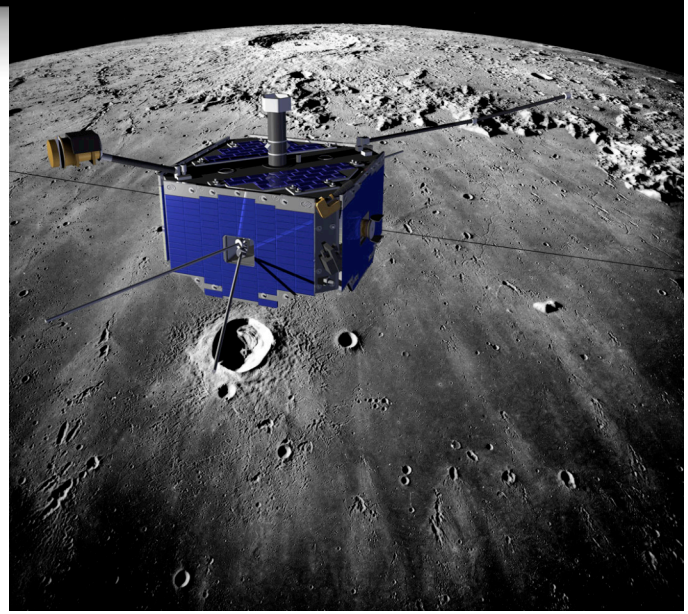

LSO is based on high heritage subsystems and sensors. The science sensors are contributed from existing flight spares and the remaining ones are built out of high Technology Readiness Level (TRL) components.

Dust Measurements: Lunar Raker

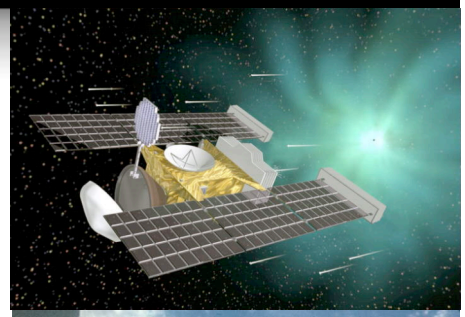

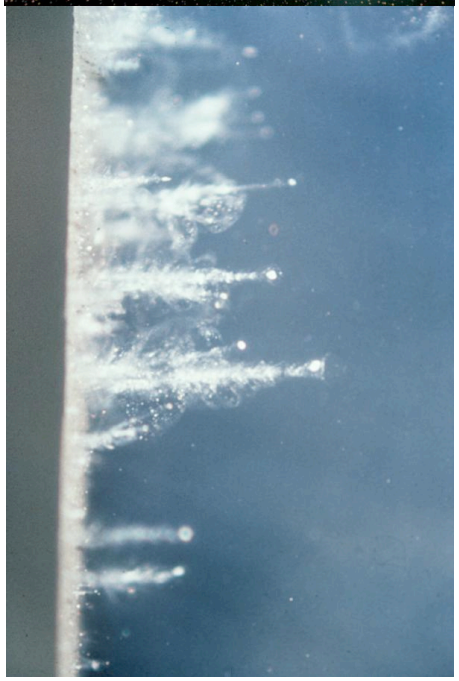

- A small orbiter mission concept: collector plates capture particles entering at both high and low velocities, with the ability to capture the stickiest of particles lofted up from the lunar surface.
- Would combine a highly elliptical lunar orbit (skim down to 15-20 km altitude) and a *Stardust* aerogel-based collector to capture and return lofted dust to Earth.
- Samples would be analyzed for composition, isotopic anomalies and evidence of extra-lunar matter, such as meteoritic materials and embedded solar wind particles.

No Pest Strips

- Small landed probes can provide in situ measurements of direct relevance to future manned outposts and lunar dust research. Beyond the obvious follow-on to Apollo LEAM experiments (pictured right), these probes could deploy vertical adhesive 'No Pest Strips' of various materials to which lunar dust can adhere.

- obtain vertical profiles of dust lofting, assess the relative "stickiness" of the lunar dust. Due in part to the changing mass to surface area ratios of different sized particles, it is expected that the adhesion efficiency of lunar particles depends on the particle size. It is also anticipated that different components of lunar fines may preferentially adhere to different types of materials.

- results can be integrated into NASA's design for next-generation spacesuits and machinery.

Lunar Transit Search

The Moon can serve as an ideal location to base a long-lasting extrasolar planet transit search system.

A small (~10 cm) lens could detect terrestrial planets around 7th magnitude stars (will achieve shot-noise limited photometric precision).

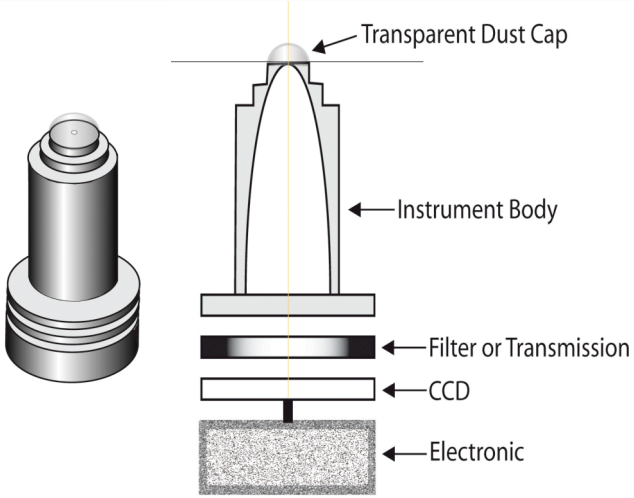

- A simple, robust system could be built with no moving parts, simple optics, and a single CCD camera. The data recording and transmission requirements could be minimized with on-board image compression and analysis.
- A photometer with a 30 degree field-of-view can observe 20-40% of the whole sky, or about 7,500 square degrees, in which there are around 5,000 stars brighter than 7th magnitude.

Lunar Ionosphere

- Another mission concept would measure the lunar ionosphere. There are discrepant measurements, with some suggesting ionospheric cut-off frequencies as high as a few megahertz, which would have a significant impact on any possible day-side observations.

- could be studied by landing an ionosonde directly on the Moon or via a lead-follow pair of spacecraft having orbits such that they could transmit between each other and measure the resulting signal delay.

Moon as Coronagraph

Hamel/Hines/Schneider/Backman/Hahn

A piggy-back instrument concept could be flown on a future lunar orbiter mission.

- **The instrument would be a multi-wavelength imaging polarimeter that would use the Moon as a natural coronagraph to occult the Sun (aka Clementine), thus allowing us to investigate the nature of the inner zodiacal dust (polarization and color properties which constrain grain size and shape).**

RFI Measurements

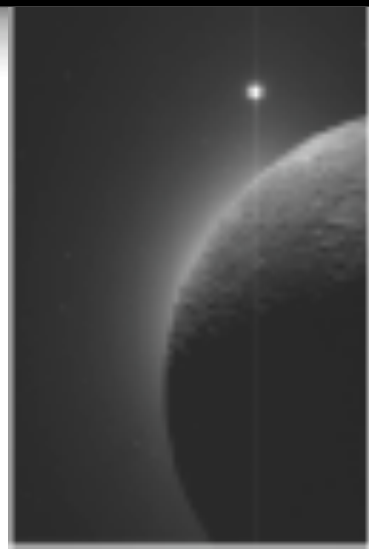

- This mission consists of Radio Frequency Interference (RFI) measurements. The most ambitious plans for far-side arrays suggest observing as low as a few tens of Hertz. The assumption is that the Moon shields even these frequencies.

- Extent to which the Moon really serves as a shield depends upon diffraction, which in turn depends upon the lunar sub-surface, which isn't well understood.

- This mission concept: one or two dipoles with a receiving system operating between 10 kHz and 500 kHz on the lunar far side.

Summary

The Moon offers clear science opportunities, particularly for Radio Astronomy, Lunar Geology, and Dust

Small robotic spacecraft, both in orbit around the moon and on the surface, offer exciting, affordable near-term opportunities to begin.

Increased investment in Lunar Data Analysis from the Lunar program will develop tools, techniques, information and a student pipeline applicable to Mars and Beyond.