Servicing the Single Aperture Far Infrared (SAFIR)Telescope From a Lunar Exploration Enabled Gateway

Dan Lester - University of Texas

Charles Lillie - Northrop Grumman Space Technology

Space Resources Roundtable VII
Lunar Exploration Analysis Group

SAFIR Mission - The Future of IR Astronomy
Large observatory beyond Spitzer, Herschel, etc.

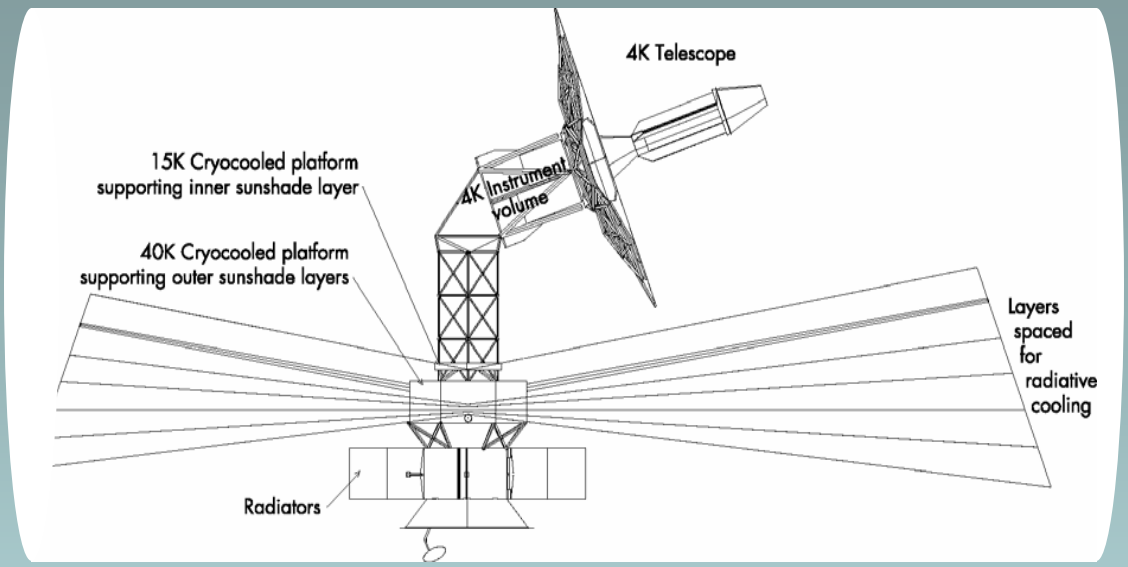

Far-infrared and submillimeter space astronomy Vision Mission.

Identified as a priority by the NRC Astronomy Decadal Report

Baseline architecture inspired by JWST, but …
10-m versus 6-m
4-8K versus 35K

- Resolve FIR background - trace star formation to z>5
  Astrophysics at the most active epoch
- Track the chemistry of life
  Prebiotic molecules from clouds to planets
- Probe earliest epochs of metal enrichment
  The universe before metals
- Identify nascent solar systems
  Birth of planetary systems

SAFIR will operate at Sun-Earth L2, which is the prime site for space astronomy in the Earth-Moon system …

The Enhanced SAFIR Mission - Commonality with Lunar Development Capabilities

… so why should a lunar exploration group care?

BECAUSE, in the interest of an "enhanced" SAFIR mission that allows regular servicing, we may share common needs that, in the interest of *molding the lunar exploration program into a coherent, integrated,and productive venture*, should be designed to accommodate many priority goals.

L1 gateway facility
- Space tugs
- Supply depoting
- Fluid retanking
- Nav/comm
- Rendezvous/docking
- Robotics
- Suit technology

→ In-Space Ops

The value of these to long range lunar development is clear in ESAS and CE&R studies.

SAFIR - Contextual Timeline for NASA FIR/Submm Missions

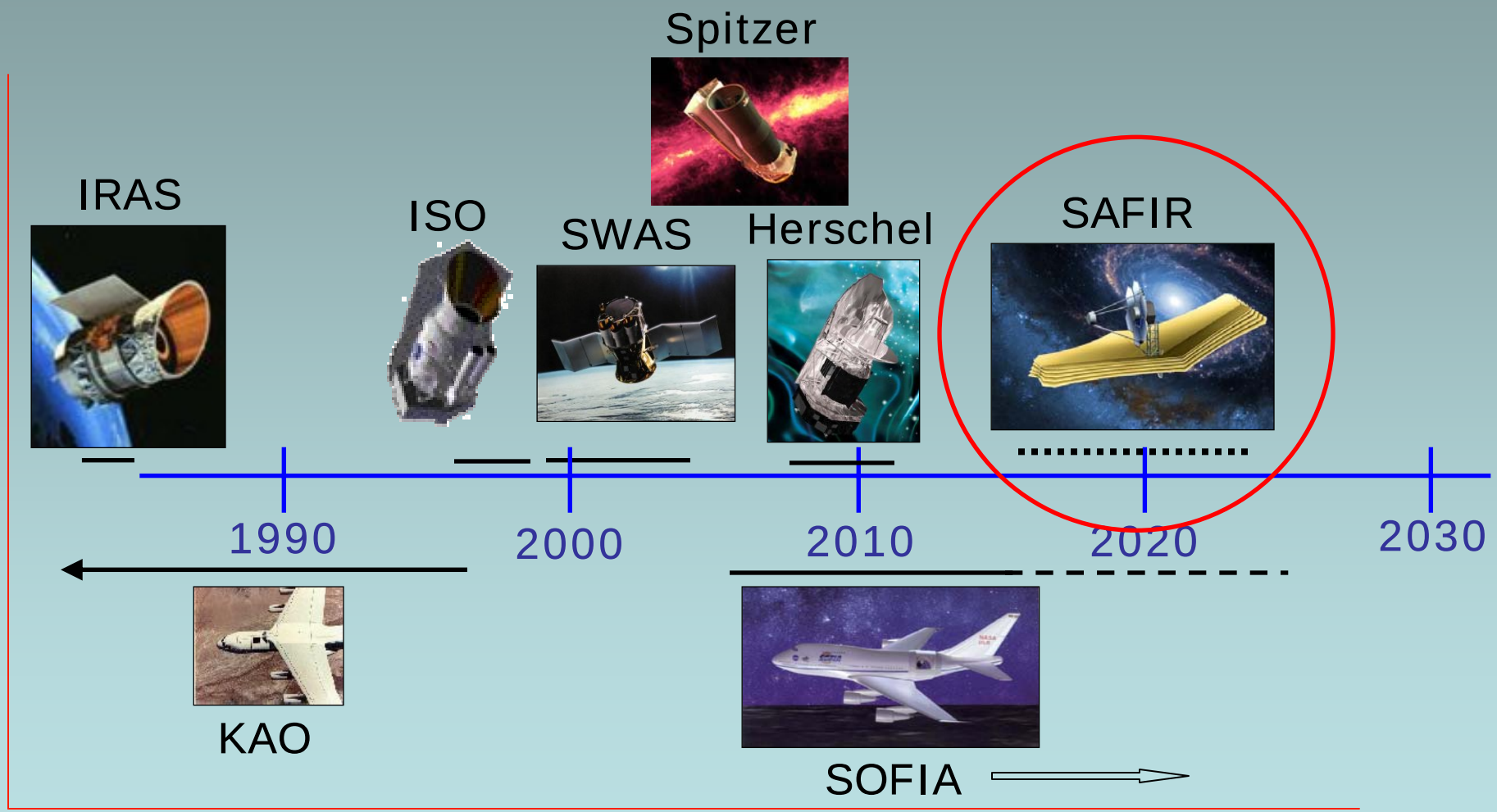

The Enhanced SAFIR Mission - Pointer to Future Astronomy Mission Planning?

We envision an “enhanced” SAFIR that gently and inexpensively returns to E-M L1 for service.

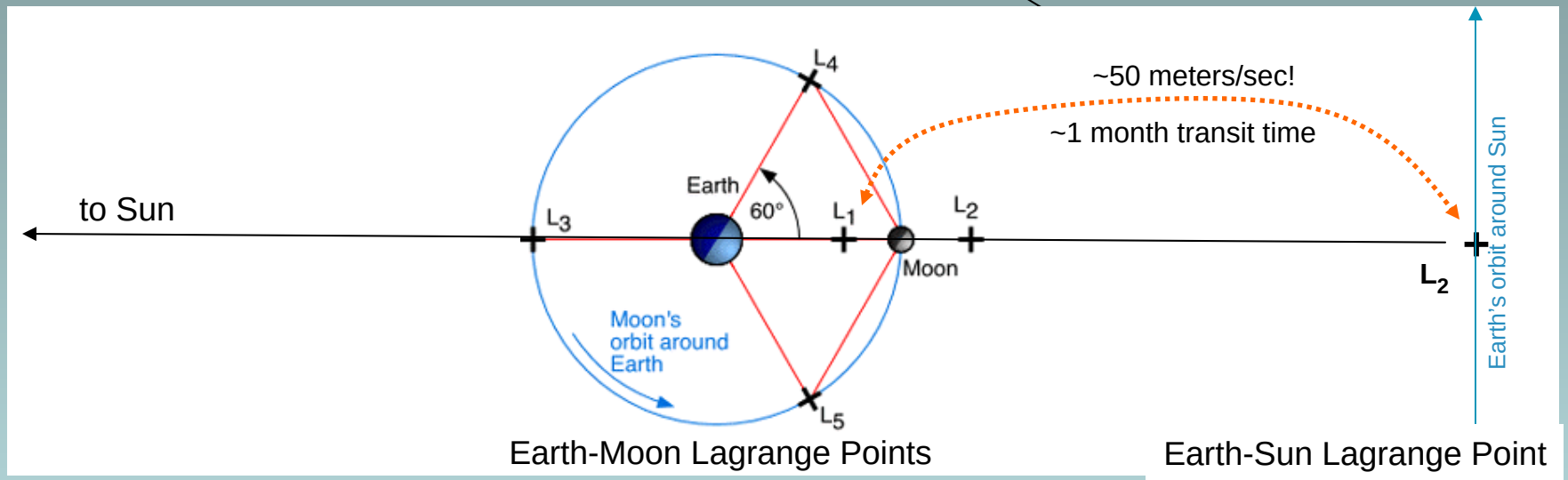

While SAFIR is designed to deploy and operate at L2 autonomously for 5-10 years, a major enabling capability would be focal plane instrument replacement, since the development trajectory for IR sensors is likely to remain very steep. “Service” could include system maintenance and repairs as well.

We could do this for many space observatories!

Value of Science Instrument Servicing Is Well Understood

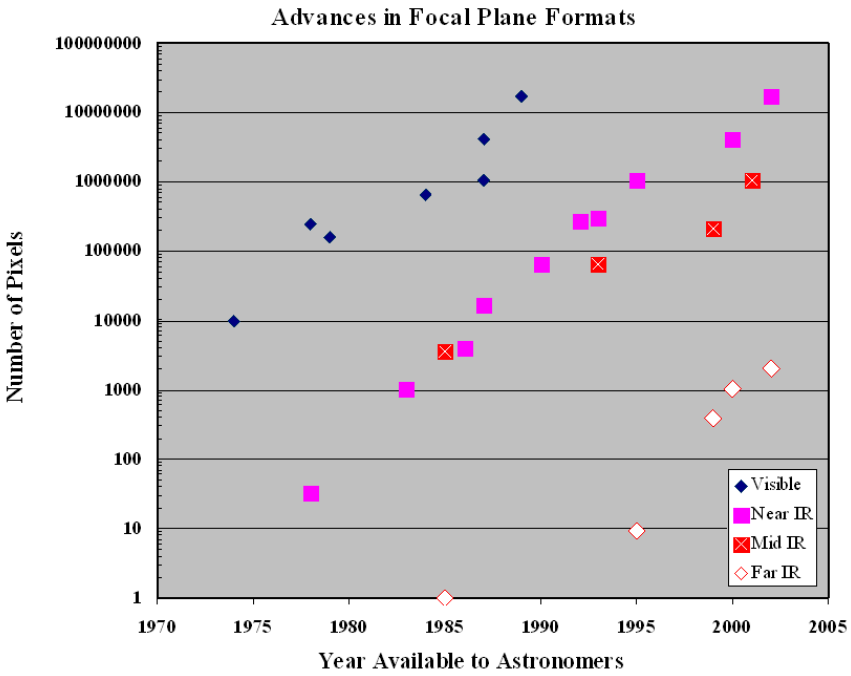

Regular servicing of HST has given an old but powerful optical system new life with subsystem changeout.

The steep trajectory for infrared sensor capabilities translates to huge increases in science capabilities in a wide-field imaging telescope like SAFIR.

Earth-Moon L1 is a High Value Servicing Venue

On-Station at L2 ?
human unfriendly
geotail, rescue time
latency in remote control

LEO (ISS?) ?
high Δv cost
contamination/
damage threat
shadow
thermal non-equilibrium

The value of Earth-Moon L1 as an enabling site for space astronomy and solar system exploration was well covered in the NASA Exploration Exploration TEAM (NEXT) studies.

LLO ?
high Δv cost
shadow
thermal non-equilibrium

SAFIR and the E-M L1 "Gateway" Concept

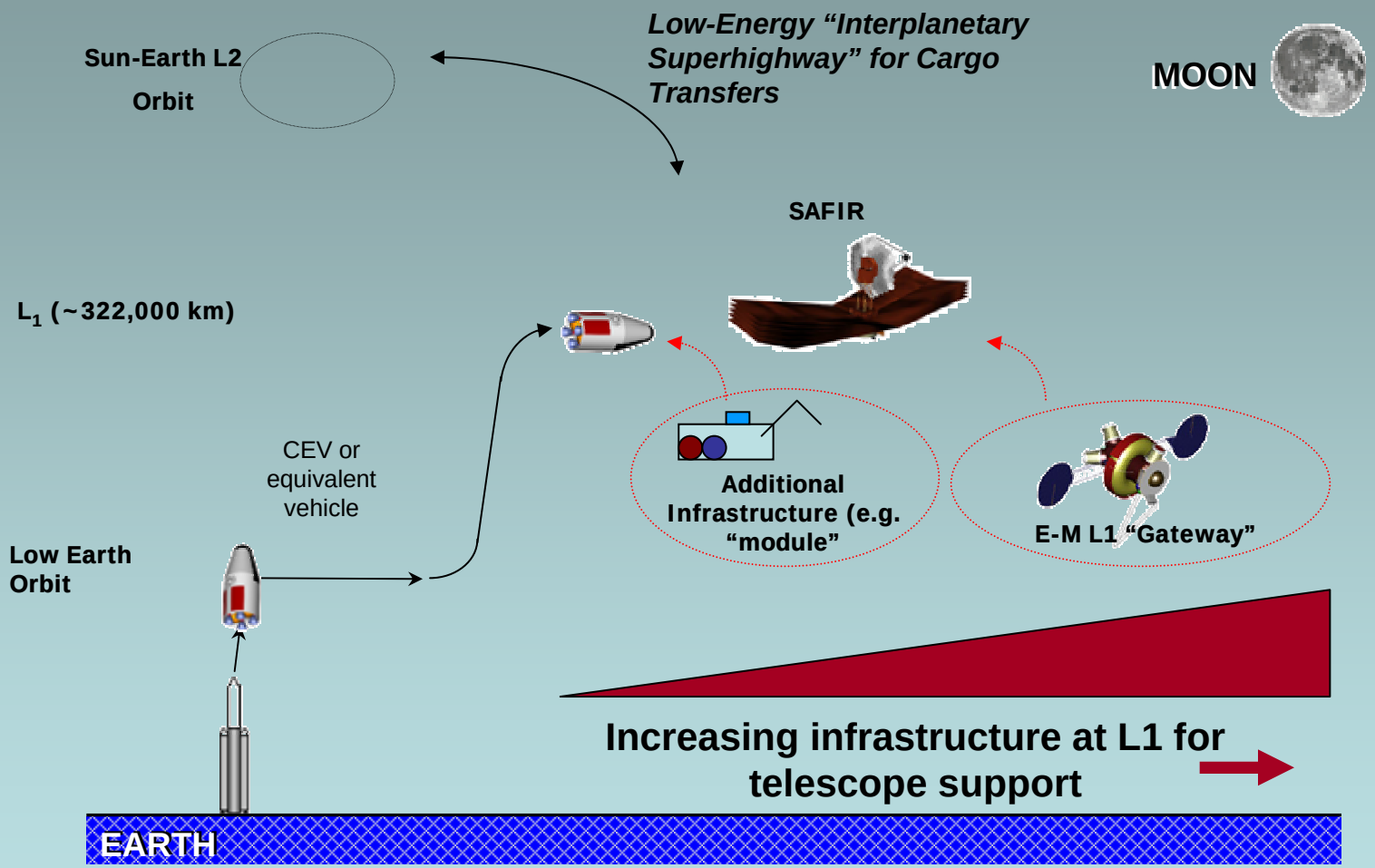

Ed Friedman Boeing Corp.

Gateway Facility Operations

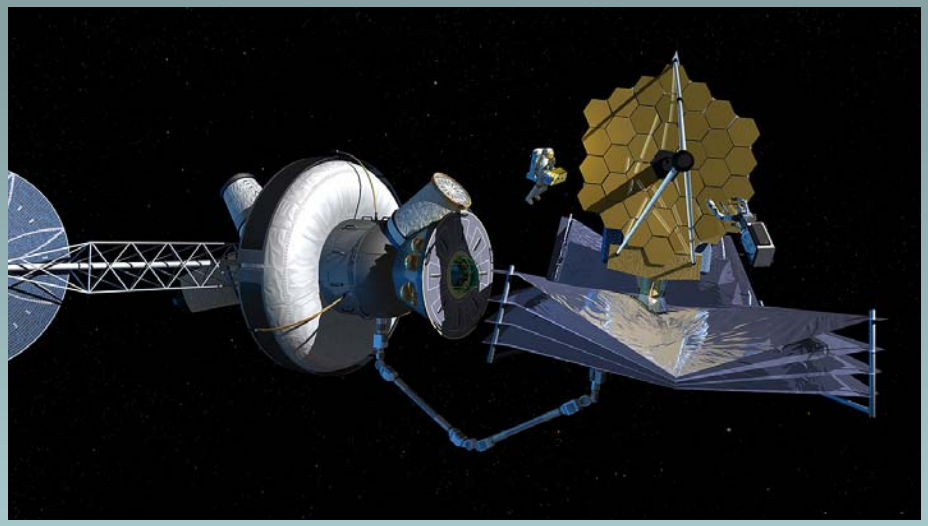

Notional gateway facility
- Short-term habitat
- Parts storage
- Traffic management (“shipyard” concept)
- Cargo management
- Service robot management
- Coupling/access crane
- Rendezvous-capable
- Power and attitude control for observatory

Contamination risks strongly argue for SAFIR to be warm when at the gateway, though bakeout before return is an option. Contamination potential from hydrazine thrusters (use cold gas?), outgassing from new cargo, human waste, etc.

Large sunshield on SAFIR is both a physical obstacle for servicing and, if not managed carefully, will prevent the telescope from getting warm.

New Architectures ?

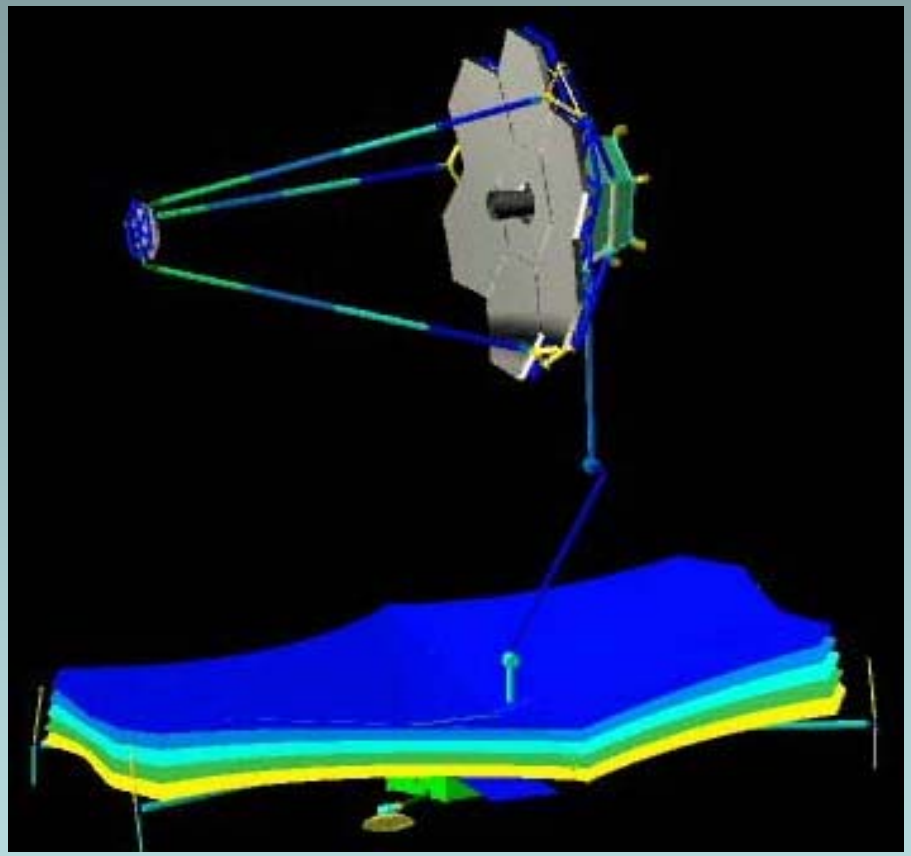

Unconventional architectures may offer both direct science value and servicing value.

Boom deployed SAFIR as proposed by NGST is an interesting trade, though boom deployment at relatively low TRL right now.

- Better passive cooling
- Smaller sunshield
- Convenient J-dumps
- Much larger field of regard

and …

New Architectures ?

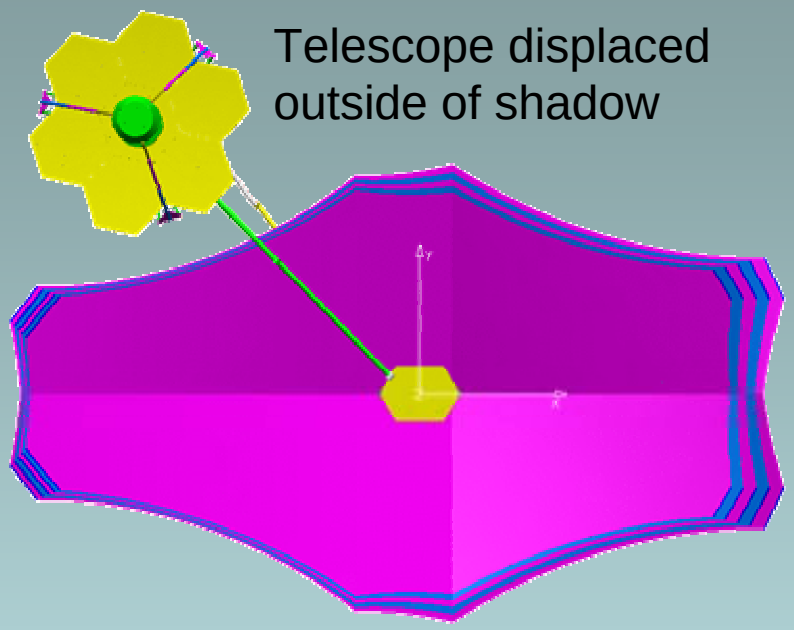

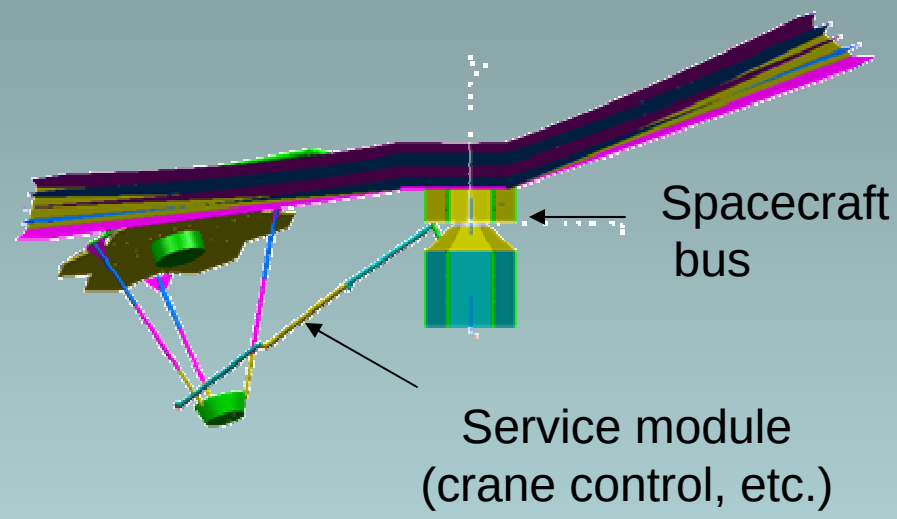

Boom deployment architecture <u>also</u> allows convenient servicing on sunward side of sunshield -- displacing the entire telescope outside of shadowed zone.

The "Vision Initiative"

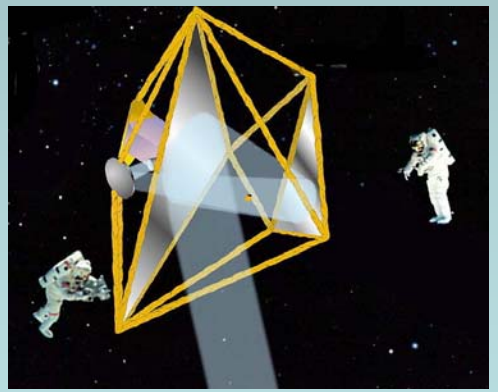

Consistent with the new NASA Exploration initiative, SAFIR Vision Mission study has been considering enabling opportunities brought by humans and or robots.

SAFIR as a test template for large astronaut-aided science facilities in space. Strong EMD, SMD interest.

A working group is considering in-space opportunities for NASA space science investments.

Enabling opportunities for astronomy in the new NASA?

Backup Slides

Does a Serviceable Far IR Observatory Belong On the Lunar Surface? Nope.

The goal of returning to the Moon suggests that the lunar surface be considered as a venue for large telescopes. This was strongly favored 15-20 years ago, when free-space observatory technology was more primitive. <u>What we used to say is no longer viable.</u>

"Lunar surface is stable, making tracking much easier."
High precision, inexpensive, robust ACS systems are off-the-shelf items now. (And free-space is actually a pretty stable place!)

"Low temperatures in lunar polar craters make cryogenic observatories possible."
Proven lightweight, inexpensive sunshield technologies offer all-sky access with very low temperatures at sites such as Earth-Sun L2.

"Lunar gravity makes parts-control easier.Things don't float away."
Engineering movable telescopes to perform in gravity demands strength and mass. Emplacement introduces extra risk.

Dirt and gravity are not enabling for astronomy.

"But there would be people there on the Moon …"

A Picture of SAFIR Servicing

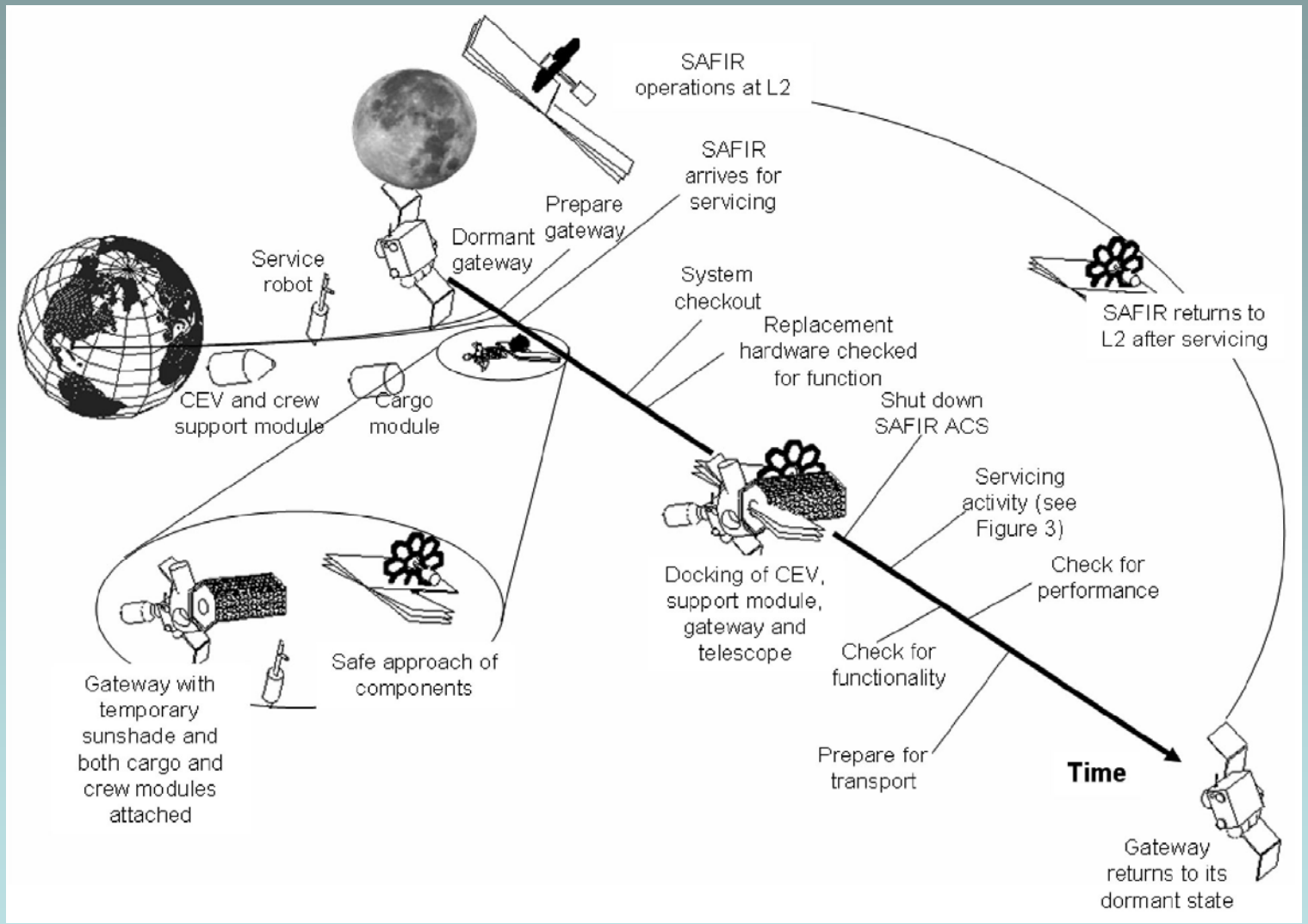

What Servicing Would Accomplish

Table 1: Service functions for the SAFIR mission

Service Function	Example	Comments
Replace ACS hardware	Attitude control hardware, such as gyros or computers.	As for HST.
Replace cryo fluids	Liquid helium, cooling line fluids	Although cryo fluids are not now baselined, the ability to replace them and extend mission life could be considered.
Replace cryocoolers	ACTDP-type cryocoolers now baselined for SAFIR.	While instrument cryocoolers (e.g. CADRs) could be packaged with the instrument, observatory cryocoolers need larger scale plumbing connections.
Replace solar panels	Deployable rigid panels, baseline InGaP/GaAs/Ge or thinned Si	New technology, as well as replacement of UV-degraded panels. As for HST.
Replace sunshade	Baseline aluminized Kapton, deploy after attachment	Replacement of UV and micrometeorite degraded panels. Tears, holes, etc.
Replace/Upgrade science instruments	Science or wavefront sensing components	Respond to technology advances in sensors and optical design and aging of the original components.
Replace Propellants	Fluid propellants used for orbit maintenance	In-space fluid transfer technology now being tested (e.g. Orbital Express). Could also just replace entire thrusters instead.
Inspection	Small cameras orbit the observatory and provide imagery	Loose shielding, tiedowns, etc.
Diagnosis	Retrieve sampling coupons placed on the observatory for analysis	Info for next servicing mission. Engineering lessons on contamination.
Replace optical components	Damaged mirror or mirror coating could necessitate replacement of a mirror segment	In-space optical recoating should be considered as an advanced alternative capability
Replace comm. Tx/Rx systems	Ka band w/directional antenna is baselined	Bandwidth upgrades as necessary to match larger sensor formats.
Replace batteries	Baseline Li-Ion	As for HST. Batteries used for safemode only in SAFIR