Commercial Transportation & Lunar Surface Mining

LEAG Meeting - Houston, “Enabling Exploration: The Lunar Outpost and Beyond”
Oct 1-5, 2007
Session:
Commerce: Incremental Steps from Earth to Lunar Enterprise

Tom Taylor

Vice-President

Lunar Transportation Systems, Inc.

Introduction

- Commercial Ventures use incremental Approach & Perspective
- Our Startup Team has started previous ventures SPACEHAB and Kistler Aerospace & Raising Money is always the Difficult Blockage

  - Our Commercial Ventures take over a decade to reach profits, 8 yrs is establishing good contact with NASA, We suggest a change more in line with the current industry

  - Previous startup business concepts have offered cost reduction, we seek other reasons for our products and services thru cooperation, milestones, interim finance,

  - Commercially Relevant Applications of Technologies Rather than New Technology Development.

- Lunar commerce not dependent on government involvement, we agree, but G's is the early market. Help us reuse old technology and discarded mat'ls.
- LTS's goal is to offer logistics transportation services to, on and from the moon by starting with innovative transportation to the moon.
- Answer some Questions

Introduction - Incremental Approach & Perspective

- Experience in 3 Entrepreneurial Ventures indicates:
- Money is always the Blockage for Entrepreneurs
- Getting good NASA contacts - 8 years
- Entrepreneurs try Innovation and bring cost reduction and eventually pay taxes
- Entrepreneurs try Commercially Relevant Applications of existing Technologies in different ways rather than New Technology Development
- Lunar Mining and Surface Logistics
- Lessons Learned from Resource Recovery Sites on Earth

Other Industries Spend Big Money

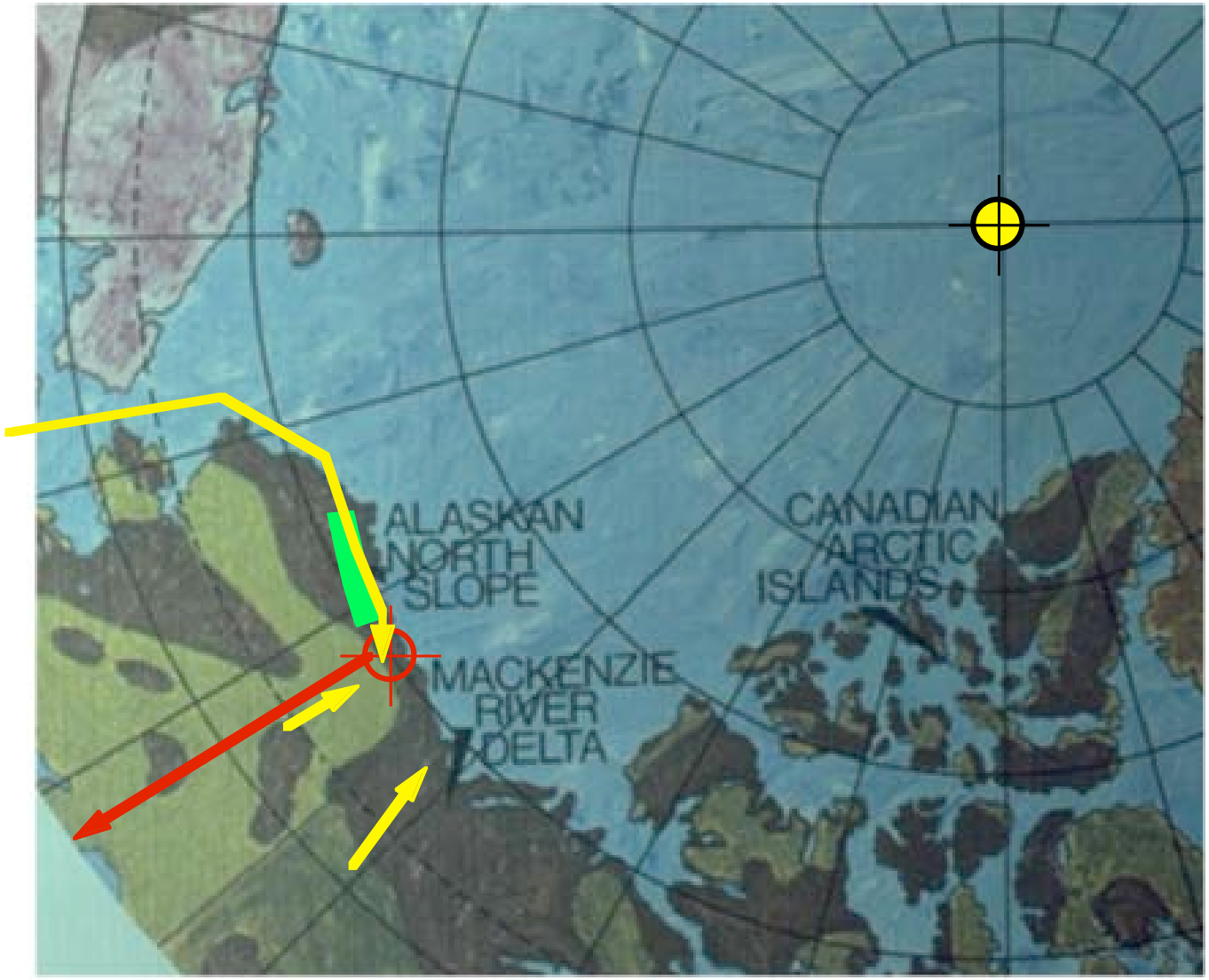

Prudhoe Bay Oil Recovery

Example

- 280 mi north of Arctic Circle
- Naval Petroleum Reserve
- Developed in the early 1970's
- Started to pump oil in 1977
- $12 B in **private** risk capital up-front + $8B Pipeline

Commercial Perspective

- More the remote base, the tougher the logistics
- Some can be learned Earth's remote bases experience, but
- The Moon's Surface
  - **50** times more remote than the North Slope of Alaska
  - **3** times more severe temperatures in both directions
  - **100 to 1,000** times as transportation expensive
  - **Comfort** Items change like air, water, gravity, 8 hr days, etc. proposes a commercial transport system with money
- Few want to invest their money, without F. H. R. (Financial Home Run)
- Public Private Partnerships (PPP) could change that
- 10 radical lessons learned in 4 years on the North Slope,
- Our nation needs commerce to flourish to justify the expense
- A commercial perspective looking at a 50 year life financed by private money would have interim financing with milestones and a market for private investors.
- President Lincoln started the Transcontinental Railroad during our worst war.

Lunar Lander Payload Capability
From LEO to the Lunar Surface and Return

Lunar Lander

Empty Spacecraft Mass - 1 metric ton

Propellant Mass - 5 metric tons

Total Mass - 6 metric tons

Spacecraft Size - 5.0 m height; 2.7 m diameter

Payload Mass - Up to 10 metric tons (transferred in LEO)

Launch Vehicle to LEO - Delta II Heavy class

Mission Profile 1 - LEO to Lunar Surface Direct - 800 kg

Mission Profile 2 - LEO to L1, Refuel, to Lunar Surface - 3.2 tons

Mission Profile 3 - LEO to MEO, Refuel, to L1, Refuel, to Lunar orbit, Refuel, to Lunar Surface - 10 tons

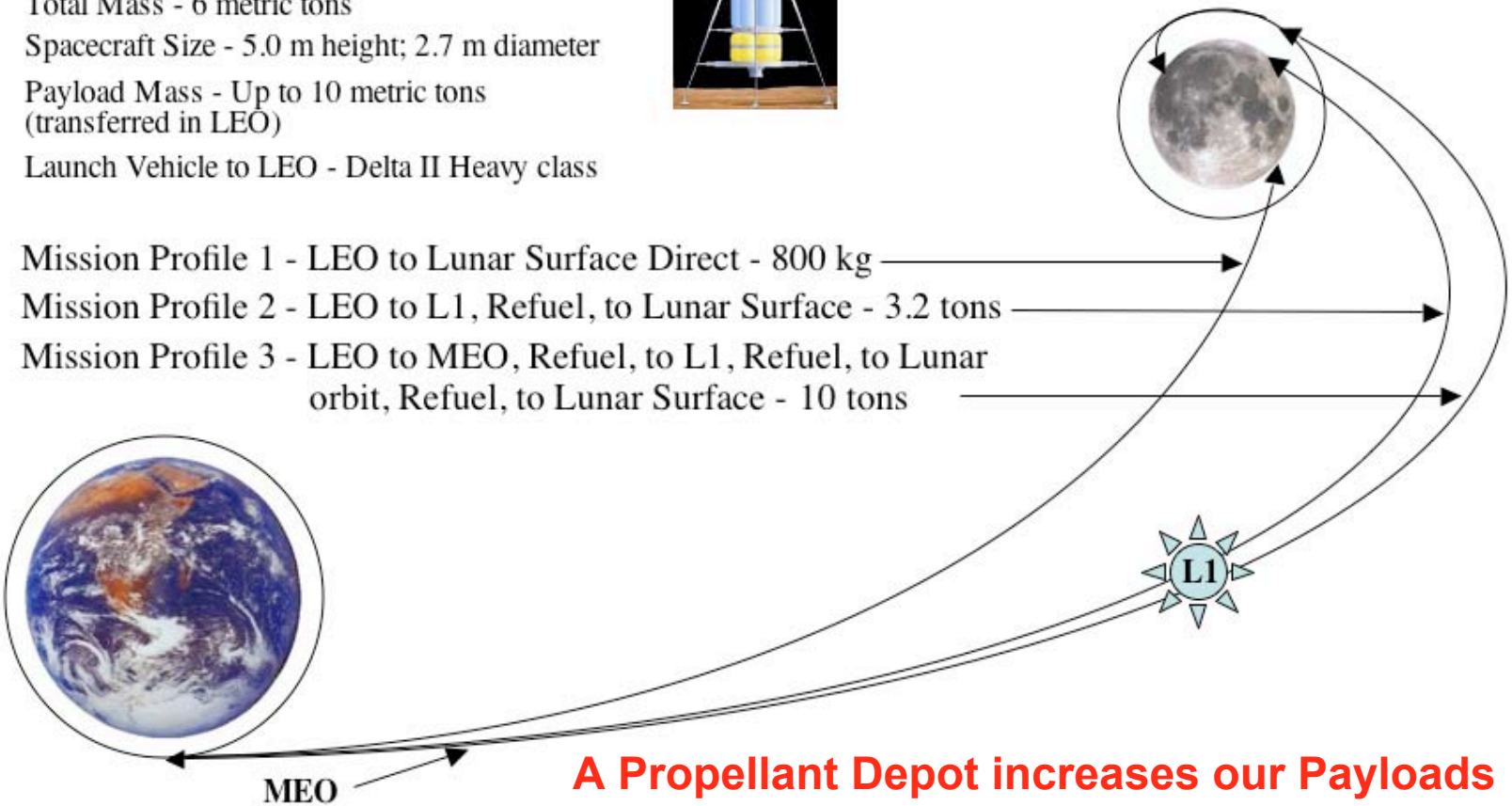

A Propellant Depot increases our Payloads

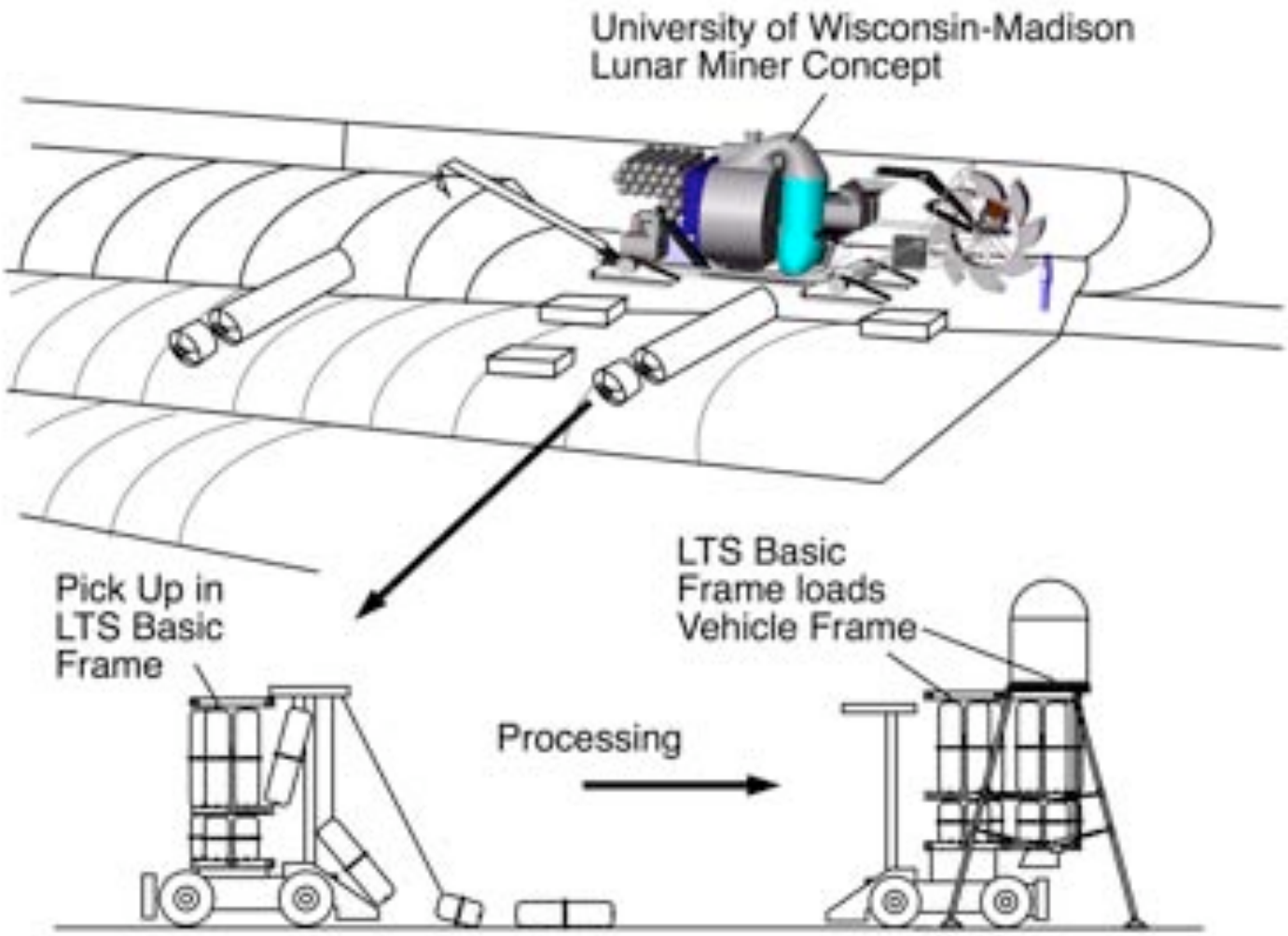
University of Wisconsin-Madison
Lunar Miner Concept
Pick Up in
LTS Basic
Frame
LTS Basic
Frame loads
Vehicle Frame
Processing

Add Proposed Innovation

- Reused tanks on Lunar surface
- Recovery of the GOX Tanks & Hydrogen
- Processing of the GOX, LOH
- Reload propellant for the LTS vehicles
- Building materials from by products
- Other

University of Wisconsin-Madison Miner

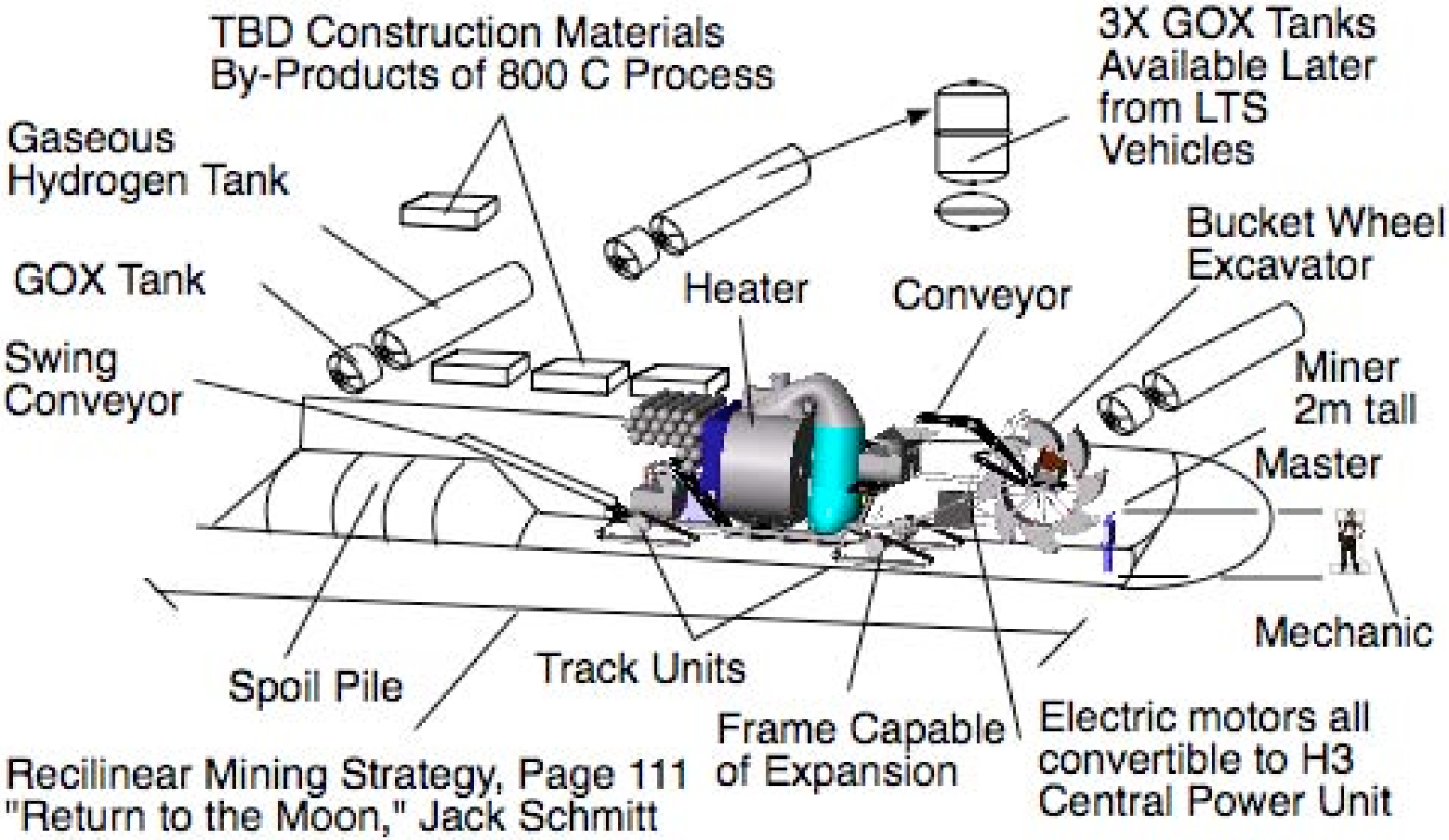

Recilinear Mining Strategy, Page 111
"Return to the Moon," Jack Schmitt

NASA's LUNAR REGOLITH CHALLENGE

Trade Routes Used to Develop Prudhoe Bay Energy Gaps in the Past

The Senate Energy Committee is considering the largest construction project in the history of mankind. **Natural Gas Pipeline is #5 Trade Route.**

1. Barges
2. Air
3. Trucks
4. Pipeline

One of Four Logistics Routes

Reusable Innovative Highway to the Moon

Learn from the trade routes of earth

- Understand the transportation cycles to and from the moon
- The earth to LEO is **commercial**
- Each mature cycle has a node at each end
- On earth it is the nodes on the trade routes that are the cities, harbors, airports, spaceports **and where the commerce emerges**

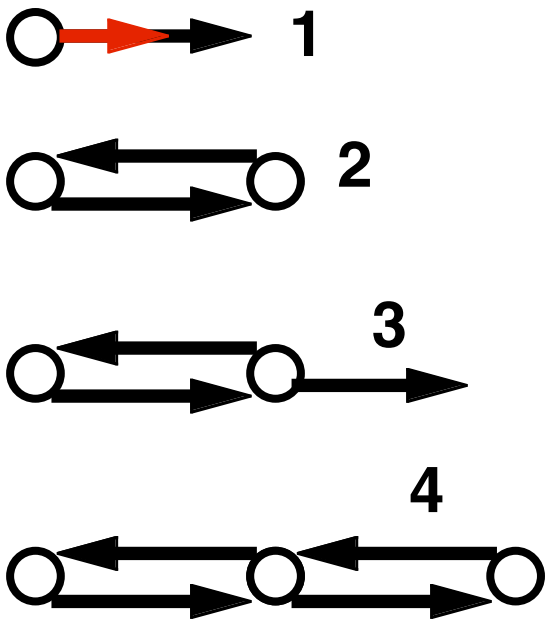

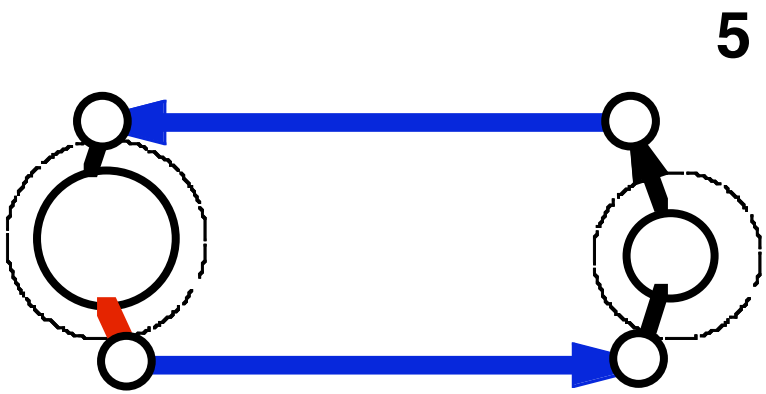

LEO as a Shoreline

Six Separate Legs

Transportation vehicle environment in a vacuum and requires propulsion between nodes and minimum capabilities.

Transportation vehicle environment in a vacuum and requires propulsion and landing legs.

Earth launch environment requires powerful aerodynamic Vehicle capable of ascent to LEO with emerging options for Launch Service Contracts with commercial organizations with a variety of capabilities.

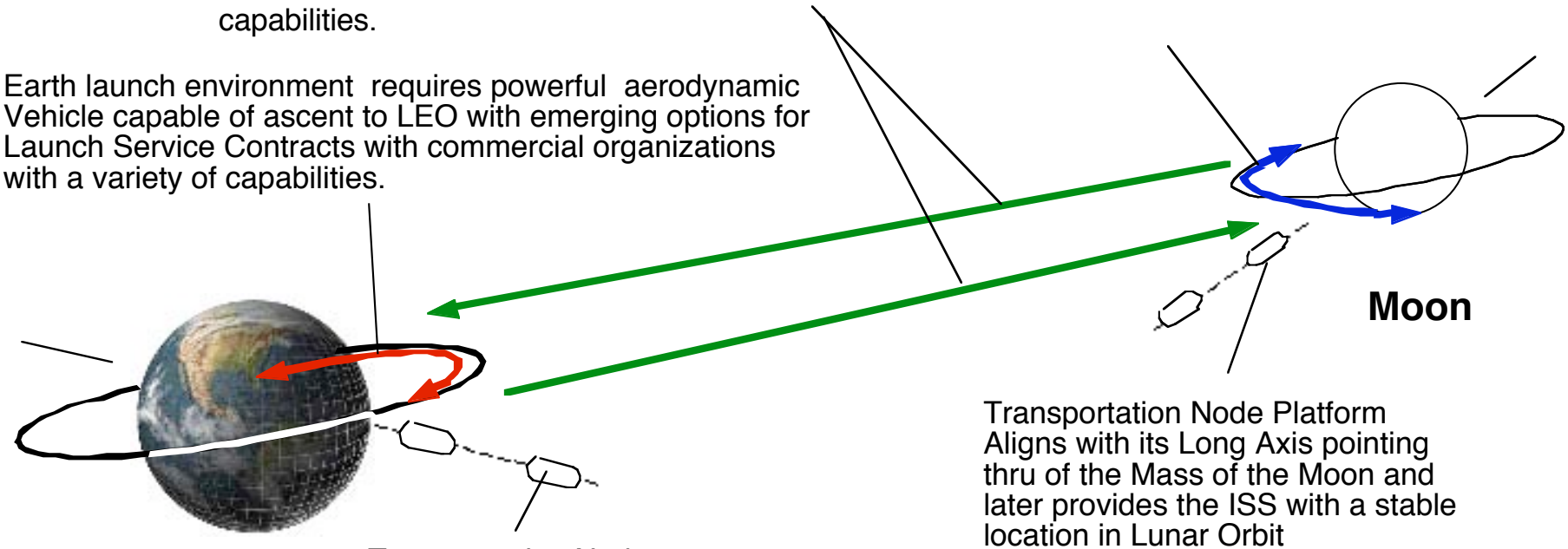

Transportation Node Platform Aligns with its Long Axis pointing thru of the Mass of the Moon and later provides the ISS with a stable location in Lunar Orbit

Transportation Node Platform for Cargo Handling, Fuel and later Human and Transportation Cycle Enhancement

Not to Scale

~ $1.5 B per mission

One Future Node System

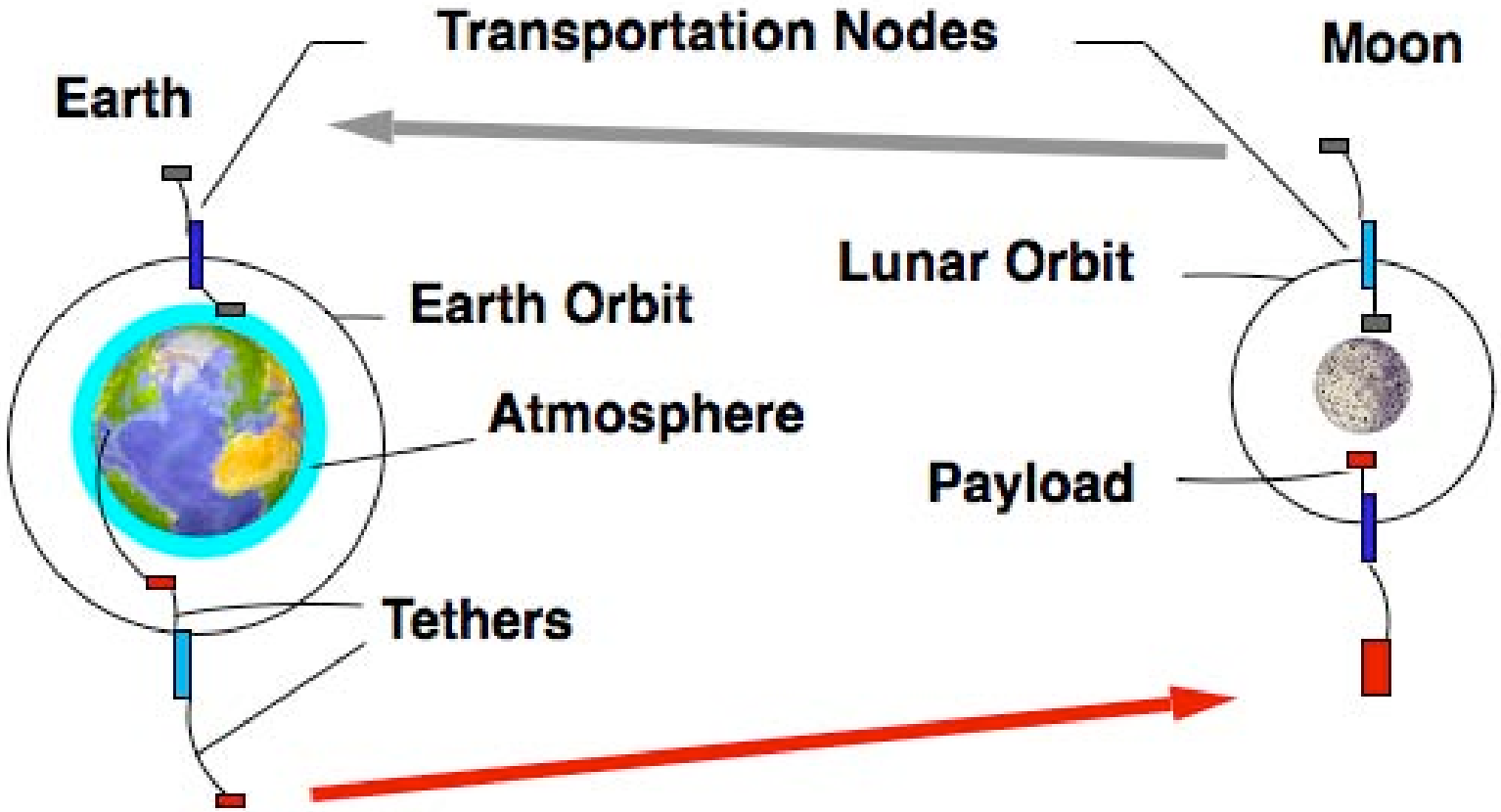

Commercial Logistics

- Transport of non-essential cargo
- Transport of odd shapes, over weight,
- Transport & Assemble machines
- Transport return cargo & **Future** resources
- Transport propellant to Lunar Orbit, beyond
- Development of trade route facilities
- Support logistics for **Remote** company town
- Support logistics - mining, resource develop

Ground Vehicle Tractor

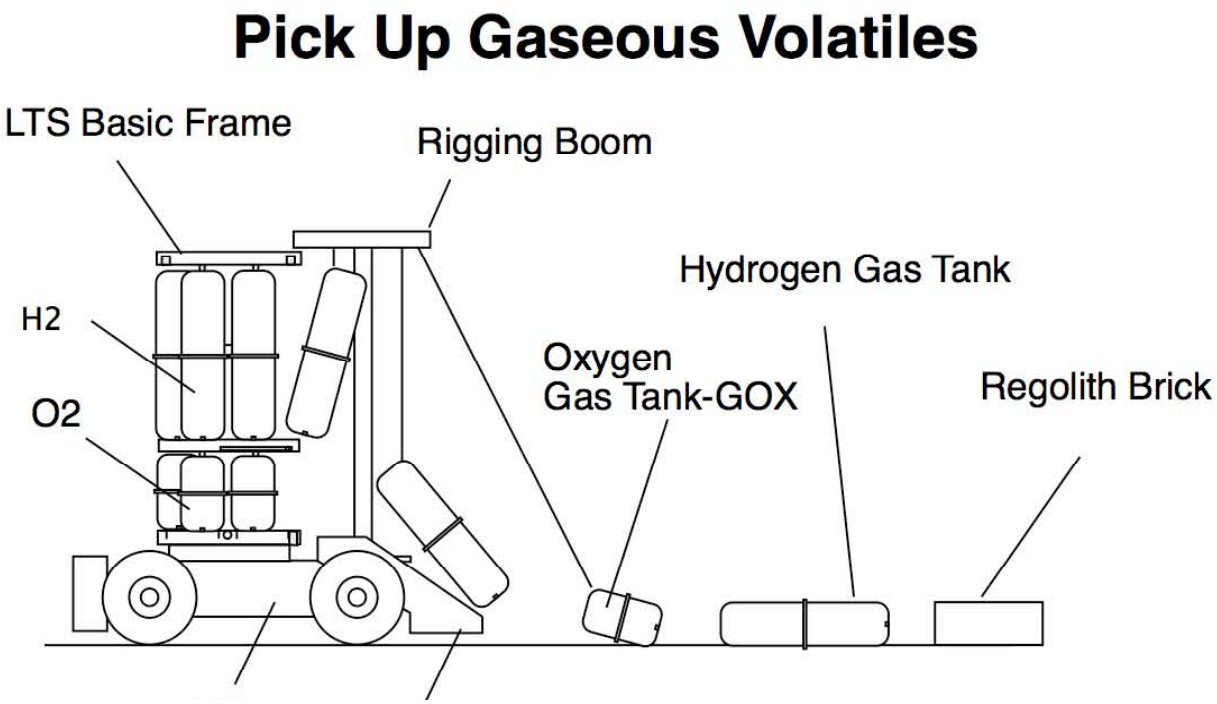

- Basic Frame, Double Power Take Off Units, Platform Lift
- Components Small enough for LTS P/L Bay & Assemble
- Manned & Pressurized Cabin & Remote Control Earth
- Electric Wheel Units capable of Reuse in all Vehicles
- Growth Capable & Sharing with others, Low Tipping Cap.

Ground Vehicle Services

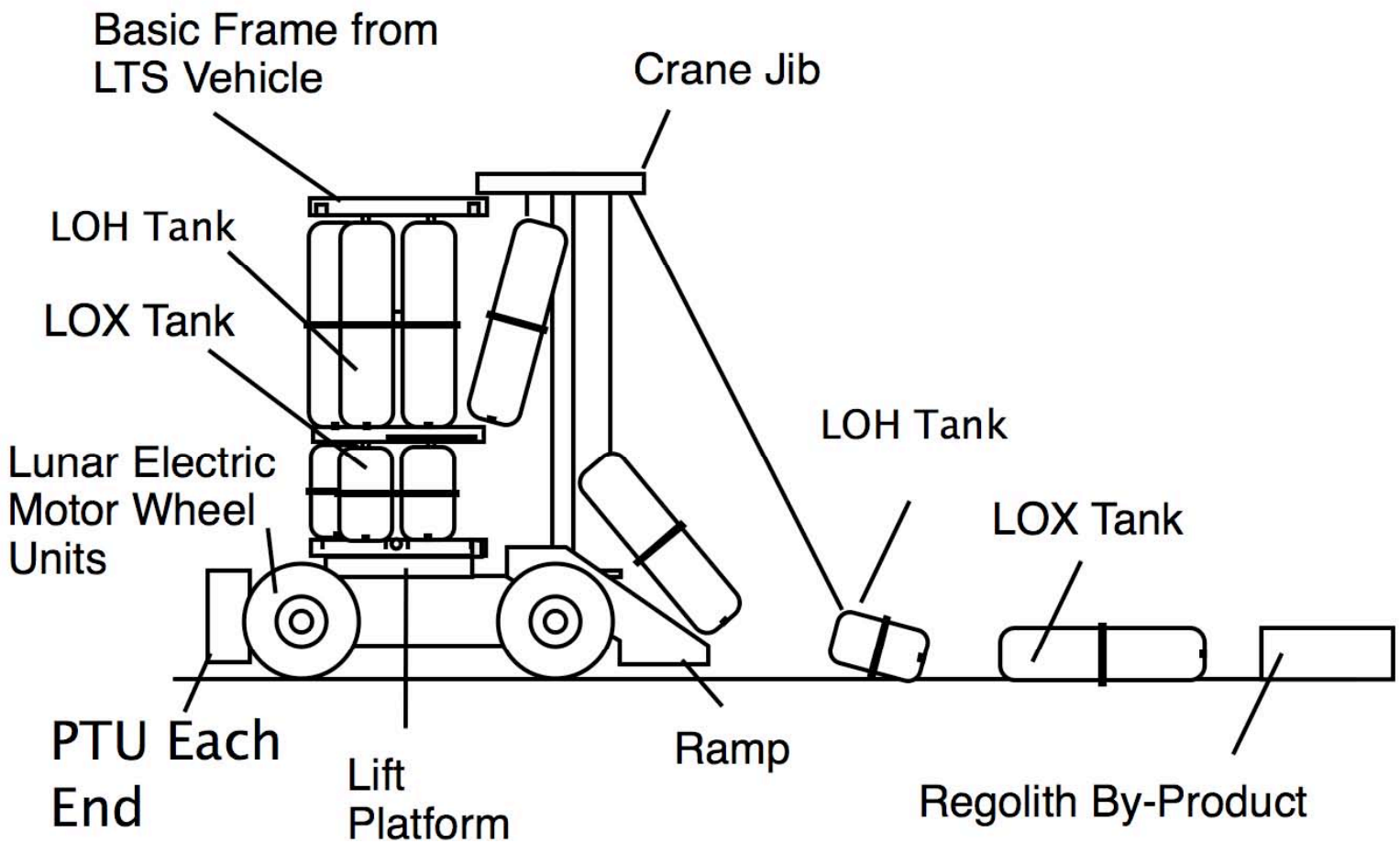

Processing Plant Flow

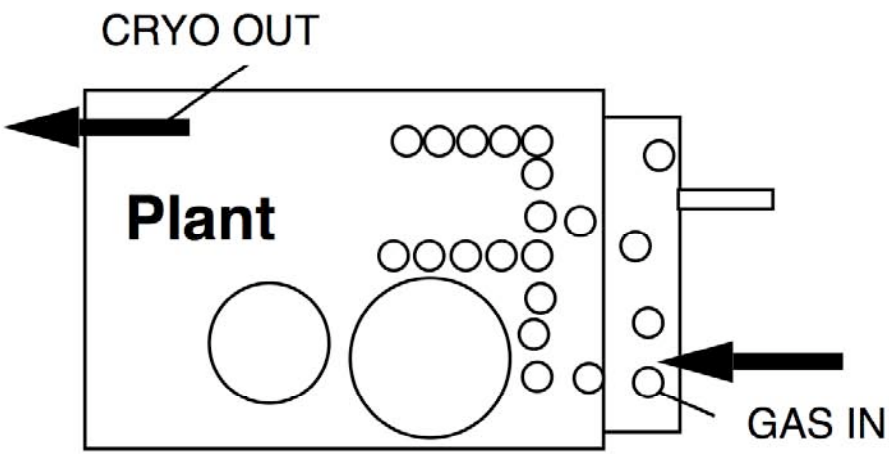

- Converts GOX to LOX
- Hydrogen Propellant
- Other Propellants
- Base Oxygen, other
- Growth
- Takes Lots of Power
- He_3 Eventually Powers It

Processing Plant Services

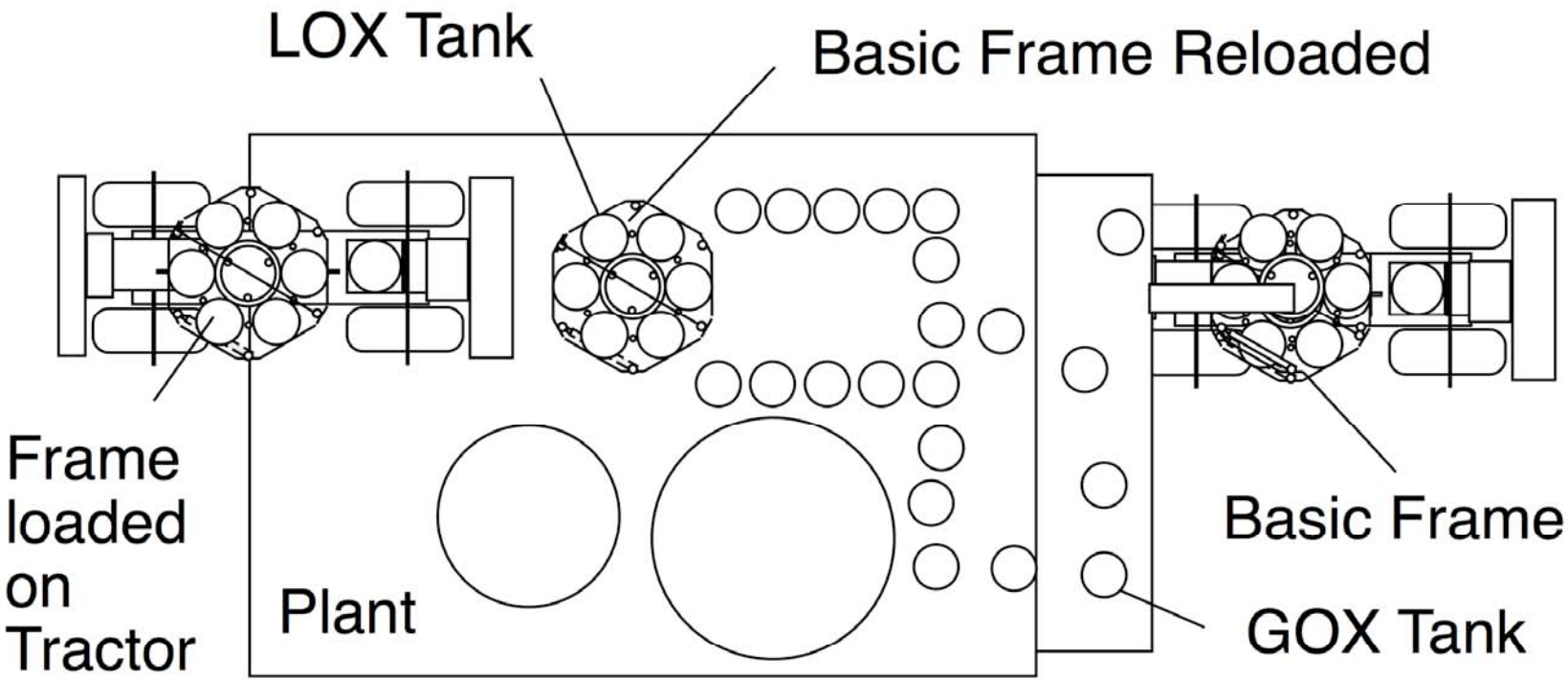

Reload LTS Vehicles with Propellant

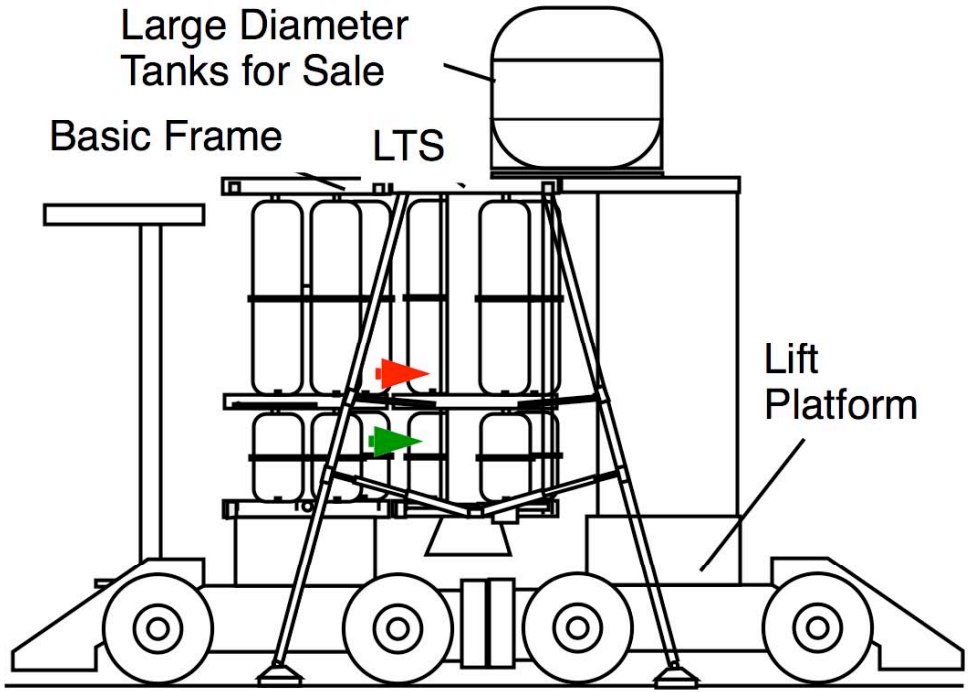

- Propellant for LTS use
- Live off the land Services for Company Town
  - Oxygen
  - Water
  - Local transport services
- Propellant for Sale
- Incoming payload handling
- Return Payload Handling
- Other Commerce

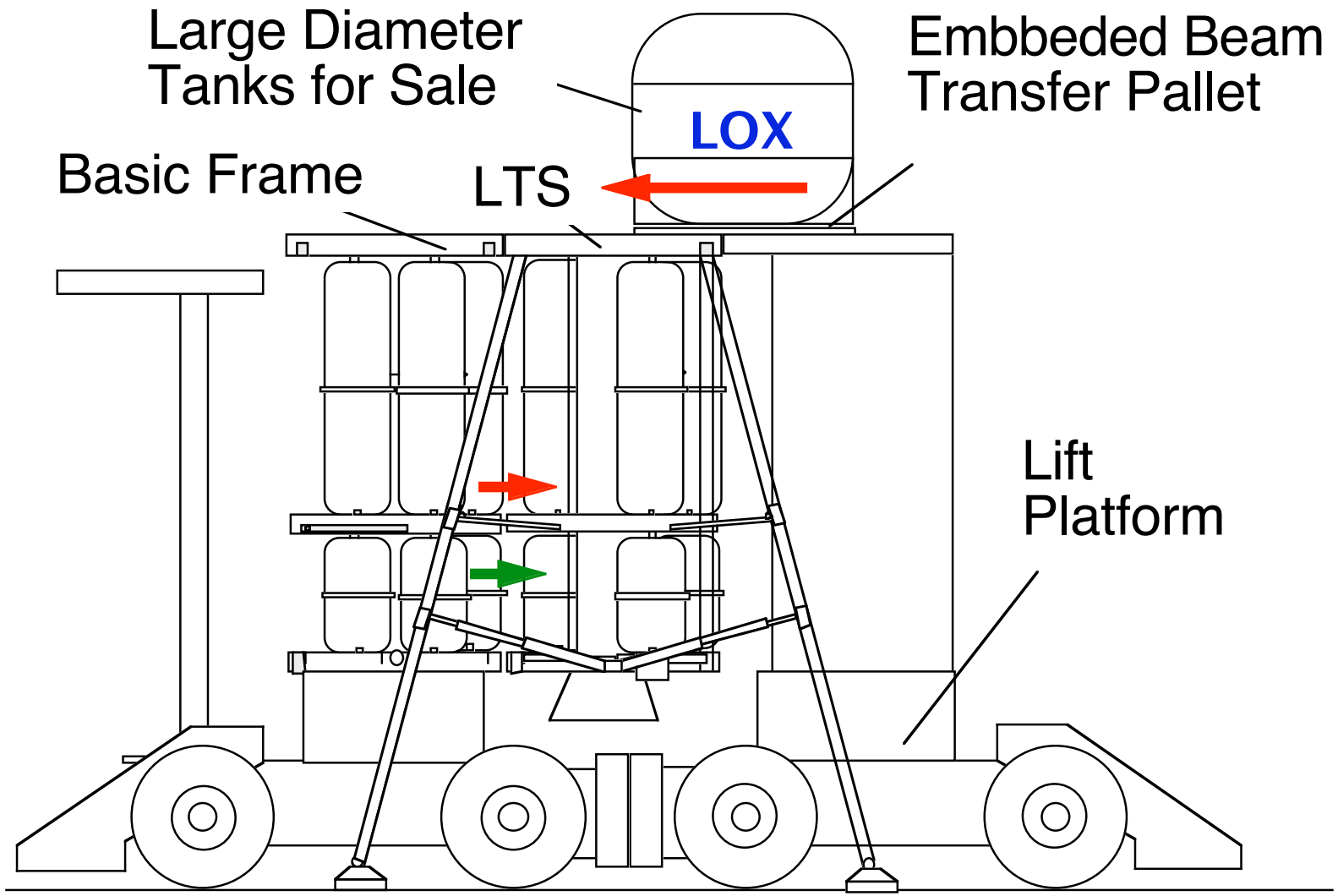
Large Diameter
Tanks for Sale
LOX
Embbeded Beam
Transfer Pallet
Basic Frame
LTS
Lift
Platform

Containerized Cargo

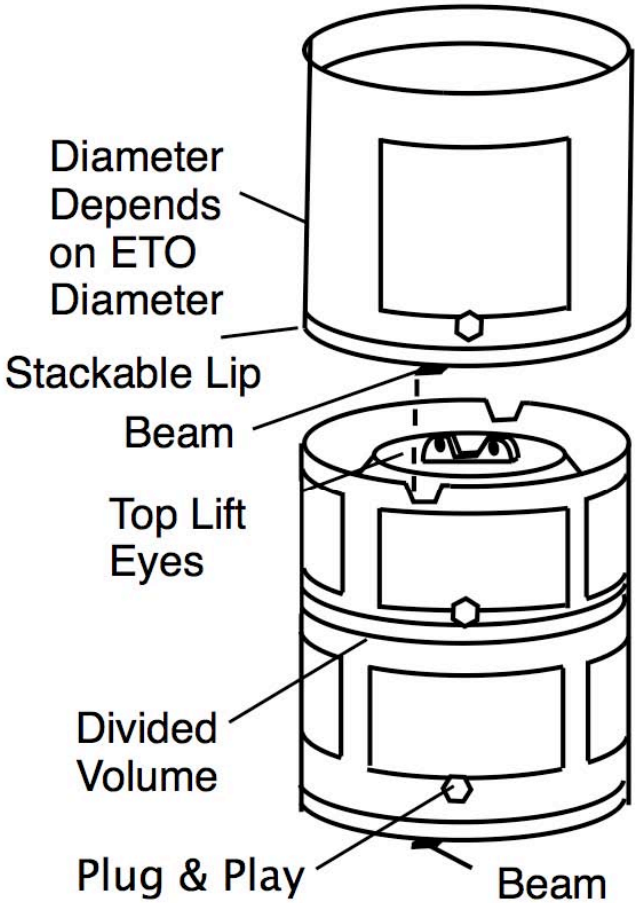

- No tie to vehicle
- No Integration
- Standard size
- Oversize Equipment
- Special Features
  - Solar Cells - sm Power
  - Plug & Play
  - Customer configured
  - Liquid, Dry, Pressure,
  - Hatches, Cryogenic,
  - Good Labeling

Vertical Shaft Recovery

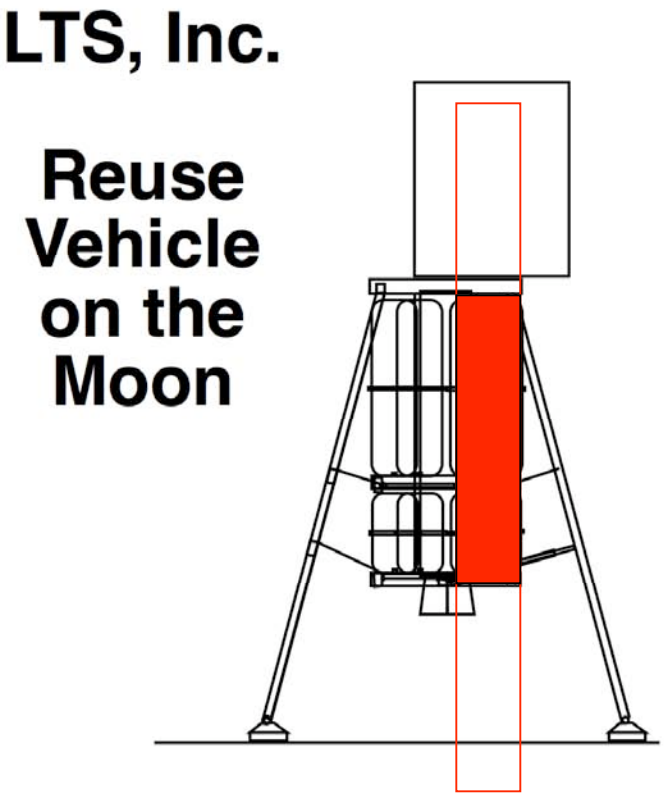

- Reuse LTS Stack
- Encourage innovation
- Design to Drill
- Telescope to cut the cost
- Hardware depends on the recovered resource recovery and value

Dragline Processing Facility

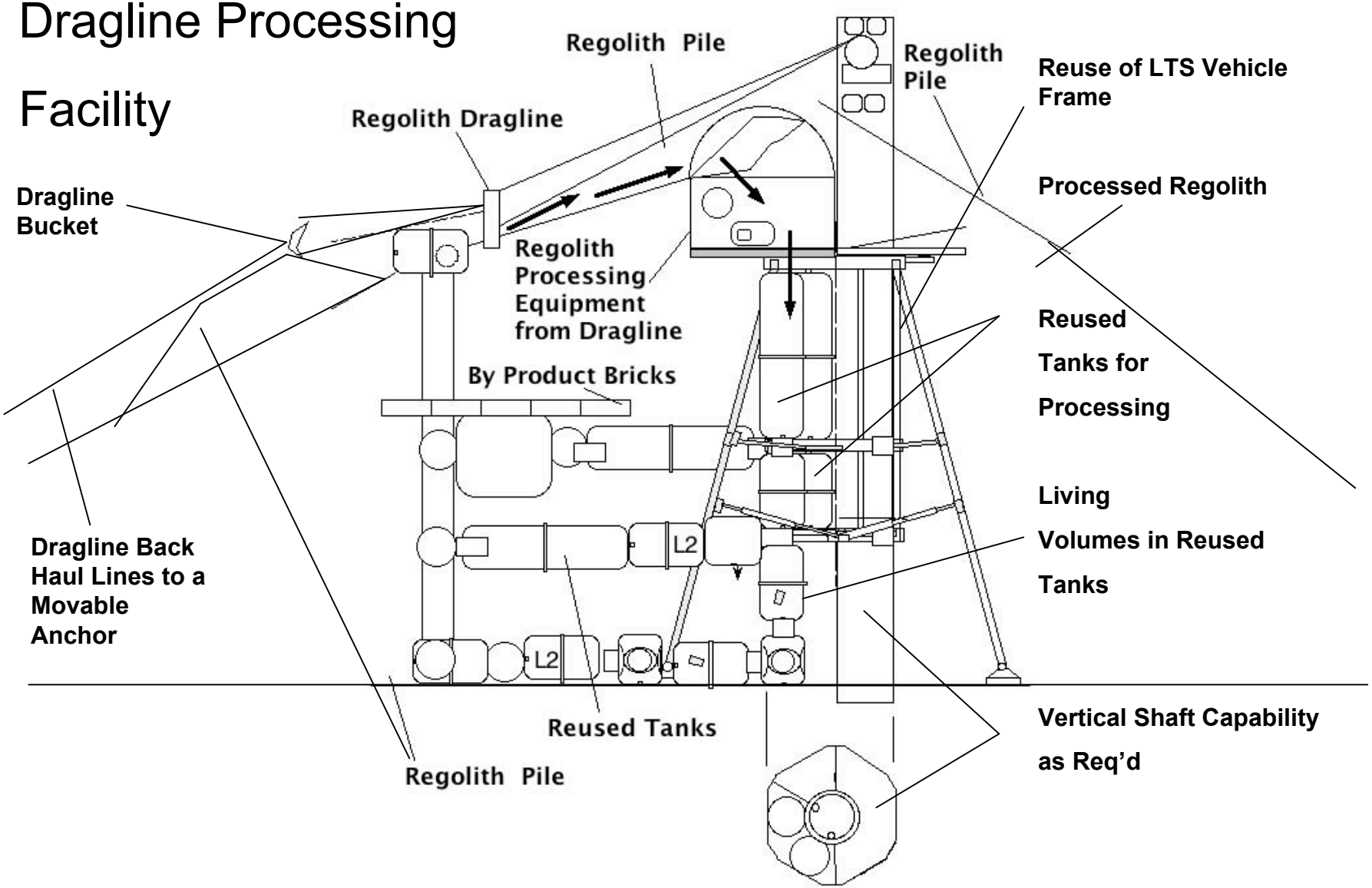

North Slope Experience

How do we find the Lunar Oil?

- We don't, but maybe something better
- Something with the economic impact to drive Private Money Investment in Lunar Commerce
- A Lunar return cargo with revenue, **He3**
- Sold to America's Power Grid owners
- Non-radioactive power source & plant
- Approx. one third the cost of nuclear plant
- Connects human space travel to non radiation nuclear

Intro Public Private Partnerships

- Space Budgets never go far enough
- 72% of our Lunar trip cost is getting to LEO
- New Zealand had similar cost problems & used
- Public Private Partnerships (PPP) to change it
- Using PPPs in Commercial Space can help
- Examples, PPP effect helps us see “C” value
- PPPs combines markets with private money
- Mankind moves off planet & solves **Global Warming** problems with Innovation, lower Cost Commercial Operations with Entrepreneurship

Basic Public Private Partnership

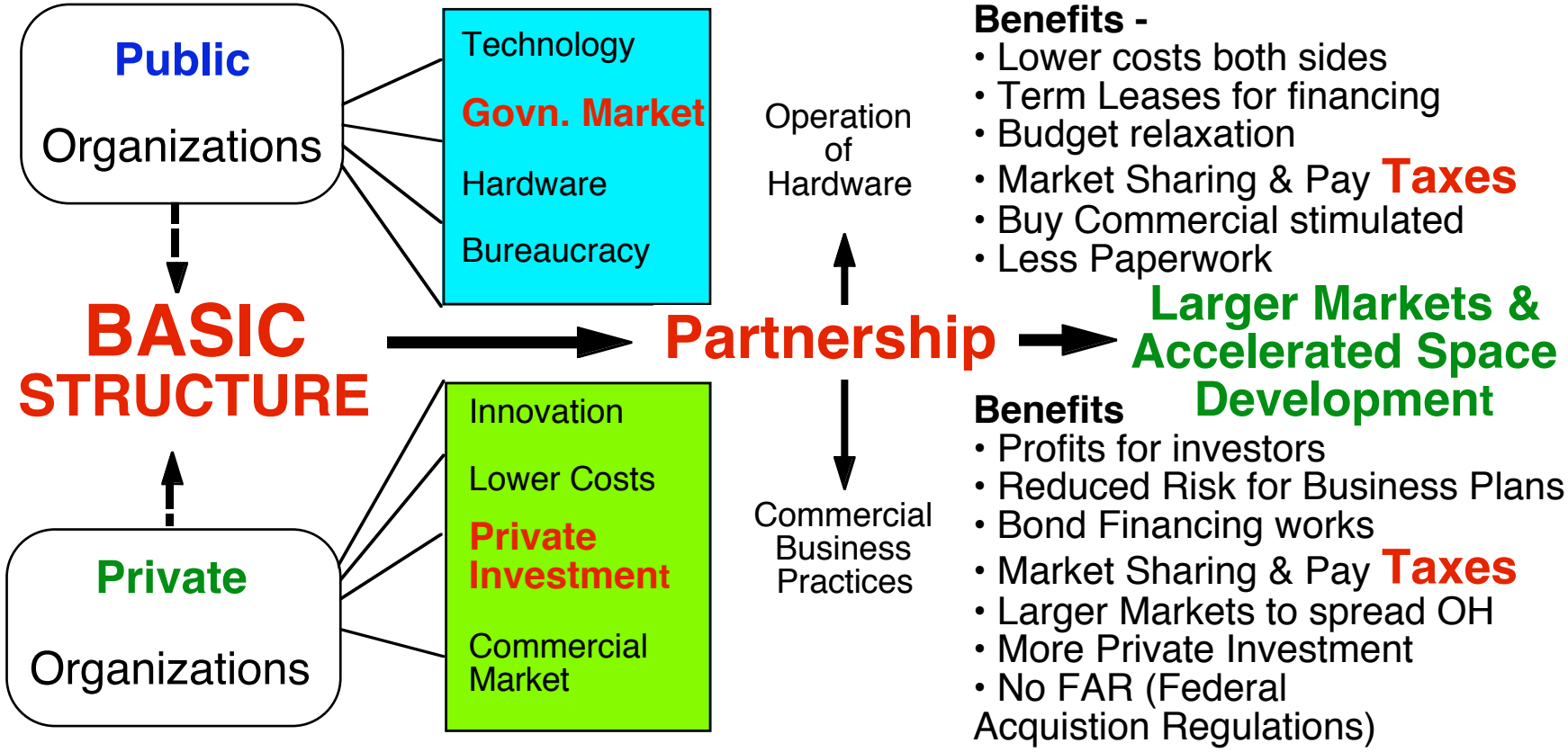

Rendezvous and Dock - LEO

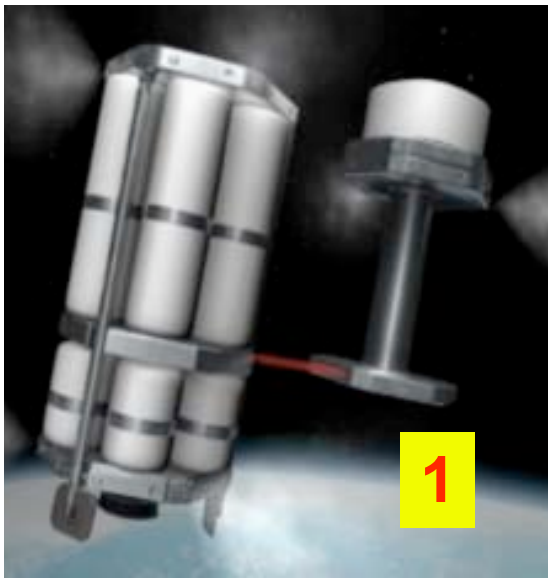

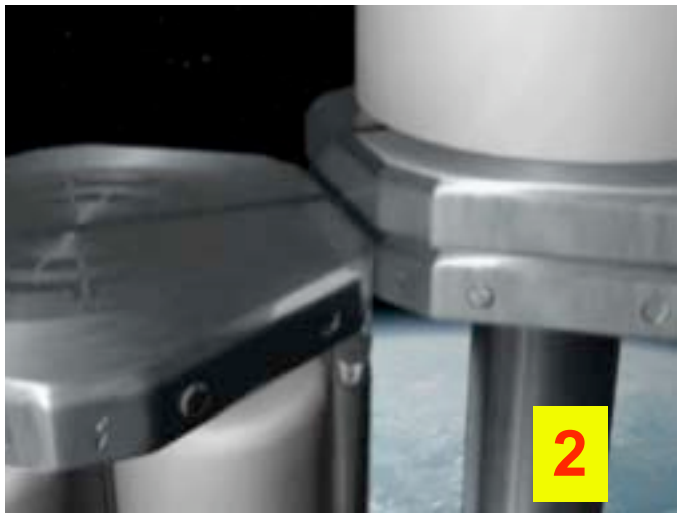

Transfer

Payloads

Any

Size in LEO

18 other oil fields have emerged

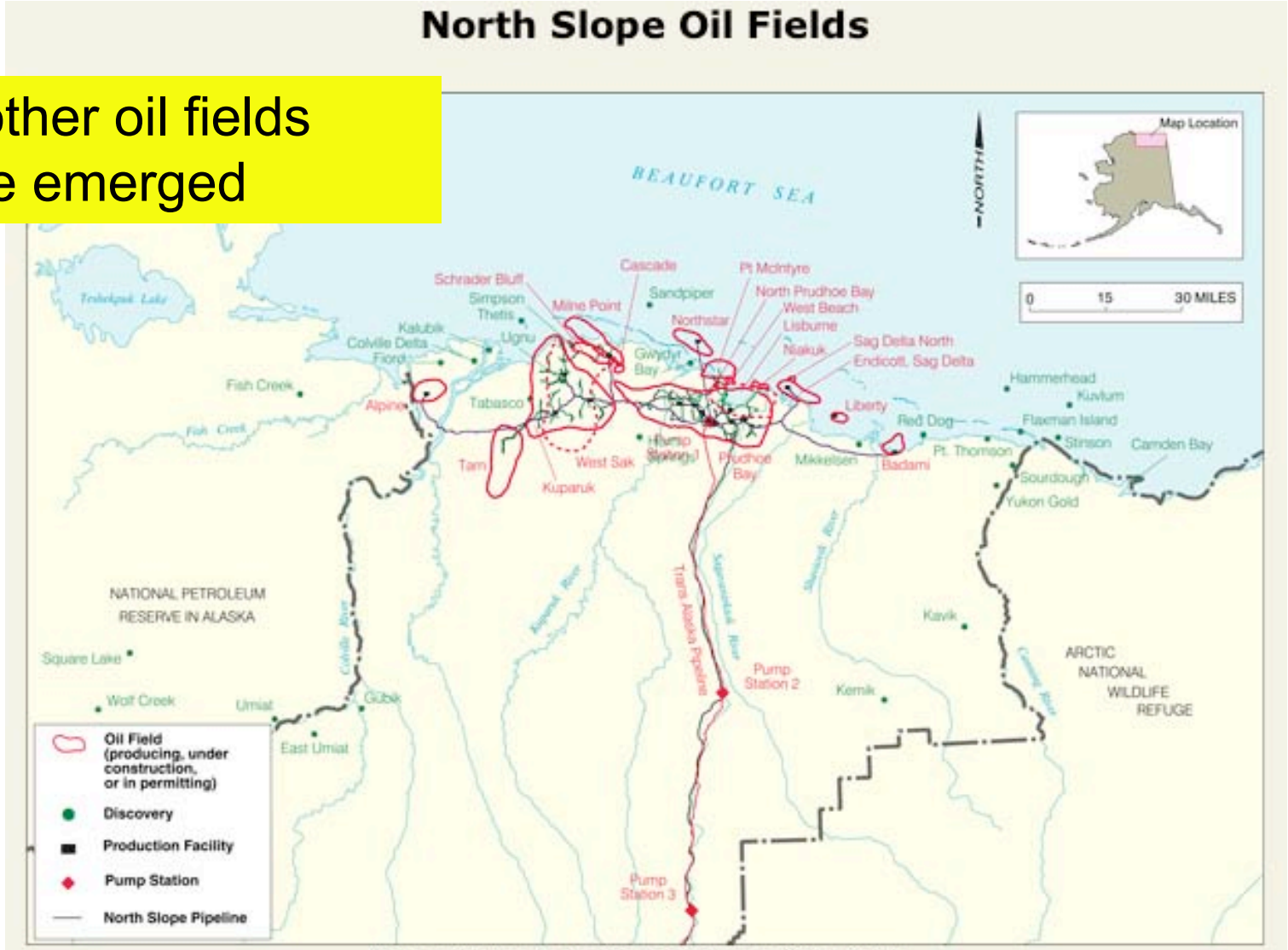

Map of Alaska's North Slope Oil Fields.

Why was private
Money risked?
Ownership of
mineral rights

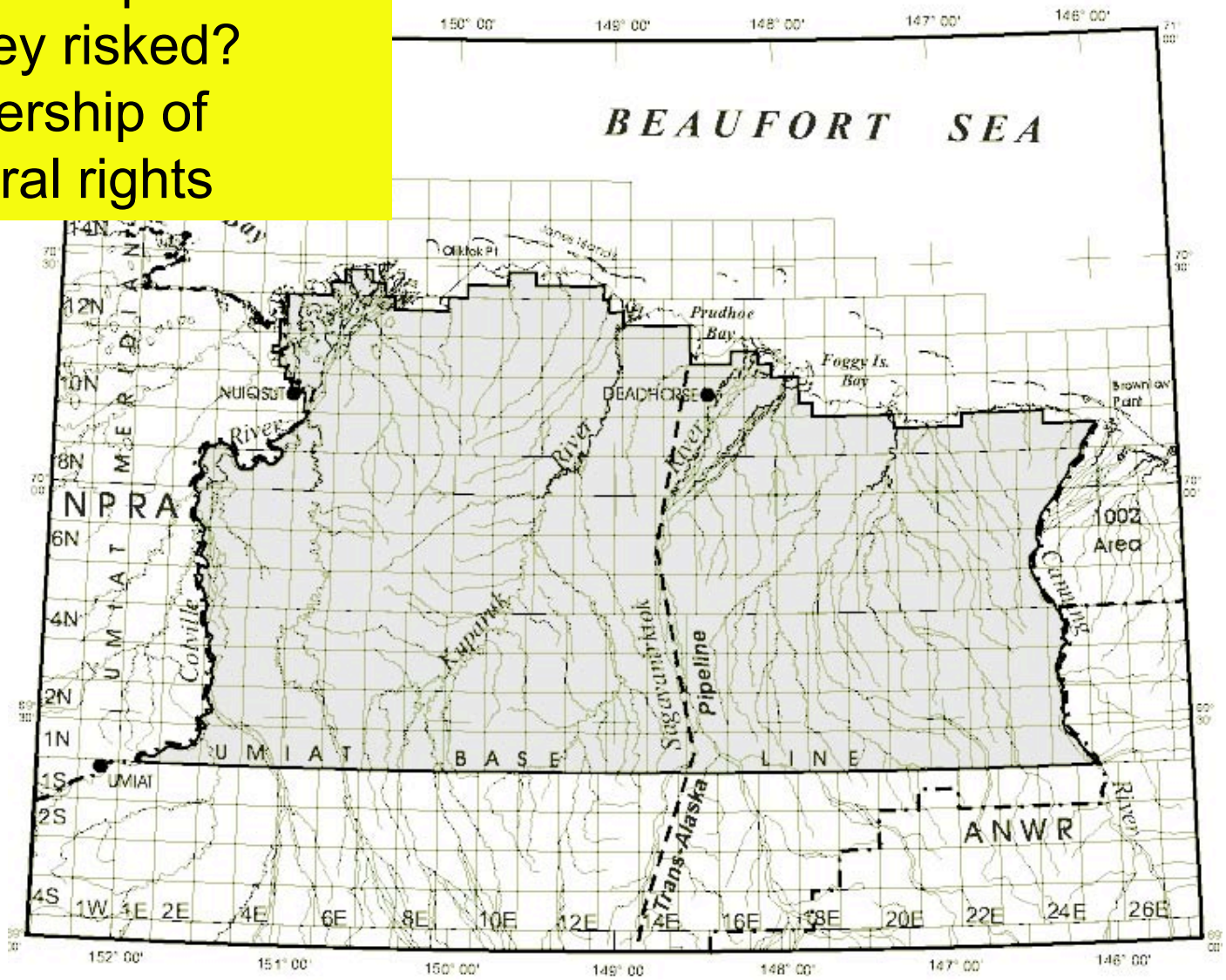

10 Remote Lessons Learned

- **No single transportation or logistics system worked all the time Have 2 systems**
- **No single logistics system offered the affordability for all materials Have 2 systems**
- **Sometimes you need something quick! Freq**
- **The labor intensive work is done in the lower labor cost area and transported assembled to the high labor cost area when possible. ?**

5. Some packing crates were used for a second purpose, because they were available. Design everything with reusability in mind

Remote Lessons Learned- AK

- **Once a logistics system is created, commerce flourishes Tourists came before oil flow in ALASKA**
- **Even equipment used in transportation needs to have a second use at the destination Tanks for storage volumes for gas recovery**
- **Tooling/fasteners standardized for second use opportunities Make connections removable**
- **Parts to be assembled on the slope mis-mark Use good Bar Codes & plug/play markings**

10. Arctic engineering & construction are different than regular construction Start Lunar engineering design courses in schools

QUESTIONS

Lunar Transportation Systems, Inc. (LTS)
Thomas C. Taylor, Vice President
3705 Canyon Ridge Arc
Las Cruces, NM 88011
USA
Phone 505-522-2192
505-522-2495 FAX

Email: taylorT@mac.com

www.lunartransportationsystems.com

http://www.youtube.com/watch?v=26Y5w0vqtIU

Video - Color Animation of LTS to the Moon

Scalability

- A fleet of larger spacecraft that are sized for the payload envelope and the payload capabilities of Delta IV Heavy or other class launch vehicles would be capable of transporting payloads of up to 30 metric tons to and from the Lunar surface.
- These larger spacecraft could deliver crews and cargo to support a permanent Lunar base.

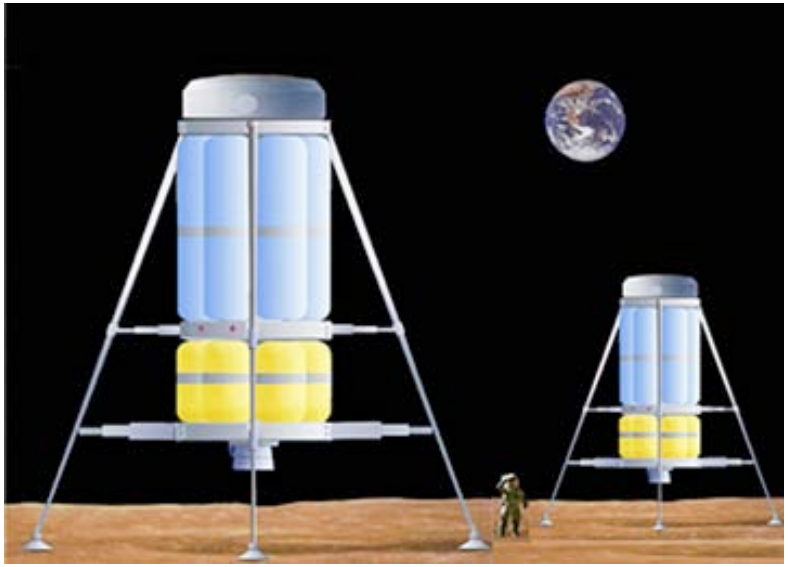

Concept for the design of a Lunar Lander. On the right sized for the payload envelop and capabilities of a Delta II Heavy launch vehicle. On the left sized for the payload envelope and capabilities of a Delta IV Heavy launch vehicle or even the new ARES vehicles with 10 m diameter.

Advantages

This Earth - Moon architecture is based on concepts that:

- Reduce Lunar mission life cycle costs and technical risks.
- Accelerate Lunar mission timeline.
- Reuse the Main Elements.
- Improve reliability and safety.
- Transport Lunar payloads to and from the Moon on the equivalent of a two way highway between LEO and the Lunar surface.

Summary

- Work with NASA to define win/win commercial strategy
- Leverage commercial investment to accelerate lunar roadmap
- Develop key technology demonstrations to reduce risk
- Bring the best from public and private sector
- Develop a new model of government/industry collaboration
- Government only pays for results not paper