AN ULTRA-BROAD-BAND SEISMIC SYSTEM FOR EXPLORING THE INTERIOR OF MARS; W. B. Banerdt[1], P. Lognonné[2], T. Pike[1], W. Kaiser[1], J. F. Karczewski[3], S. Cacho[2], C. Cavoit[4], and N. Striebig[3]. [1] Jet Propulsion Laboratory, Pasadena, CA 91109; [2] Institute de Physique du Globe de Paris, Paris, France; [3] Institute Nationale de Science de l'Universe, Saint Maur, France; [4] CRG, Garchy, France.

Determining the structure of the interior of Mars has been a high priority for every Mars exploration strategy developed in the past 20 years. While a great deal of information can be obtained by studying the gravity and magnetic fields of a planet, seismology is by far the most effective and detailed tool for investigating the radial and lateral distribution of density and elastic properties within a planet, and, by inference, its compositional structure.

The primary objectives for a seismic investigation of Mars have been clearly articulated by the scientific community (see, e.g., [1]). They are: 1) Determine the radial density distribution of the planet, specifically the size, density, and physical state of the core, the thickness of the crust, and radial density variations within the mantle; 2) Measure the seismicity of the planet in terms of the overall number of events and distribution of sizes; 3) Map the spatial distribution of seismicity and its relationship to current tectonic processes; and 4) Provide an estimate of the current meteoroid impact flux.

A fully capable seismic investigation should be able to probe the deep interior using far-field teleseismic body wave travel times, seismically excited normal mode frequencies, and the magnitude of the tidal response due to perturbations by the Sun and the natural satellites. Shallow structure will be obtained primarily from the dispersion of surface waves at periods from 5 to 100 seconds, as well as body wave travel times from nearby events. The characteristics of seismic sources can be studied with the high-frequency portion of the spectrum obtained by broad-band instrumentation. The temperature variations with depth could be estimated using the relative attenuation of seismic waves.

As seismic information is spread over a large frequency band, from tidal frequencies (10^{-2} mHz) up to 100 Hz, Ultra-Broad-Band seismometers (UBB), which cover DC-100 Hz, are then the best candidates for future seismic networks on Mars and other terrestrial bodies. However, maintaining the extremely high sensitivity required for carrying out a limited-duration experiment on a relatively (compared to Earth) quiet planet over this entire frequency band presents considerable technical problems, especially in light of the constraints imposed by launch and landing loads, planetary protection sterilization, and radiation hardening.

The first generation of Broad-Band space qualified seismometers is the OPTIMISM vertical axis Broad-Band Short Period seismometer. It was developed in France for the Russian Mars94 mission, and is part of the Small Station payload. Its sensitivity is better than 10^{-9} g (10^{-8} m/sec^2) at 1 Hz, two orders of magnitude better than the Viking seismometer sensitivity, and will enable a first "reconnaissance" of the seismic activity and propagation properties of Mars. However the sensitivity and bandwidth of this instrument is still not sufficient to address all the requirements for a full seismic investigation.

Such a high–sensitivity seismometer is presently in development. In order to achieve high sensitivity at both high and low frequencies, it combines a Long Period (LP) 3–axis sensor, developed by IPGP/INSU, and a Short Period (SP) 3–axis sensor, developed by JPL, into a single integrated package with a shared command and data system and environmental control. This is similar to the approach adopted for the Apollo ALSEP seismometer, which integrated a 3–axis LP with a single–axis SP. Our LP sensors use a leaf spring pendulum design inherited from OPTIMISM, but with better thermal compensation and much more sensitive transducers. Its bandwidth will extend from frequencies less than 10^{-5} Hz to around 2 Hz. Our SP sensor consists of a triad of silicon micro–machined seismometers (Figure 1), using extremely sensitive ultra–high frequency capacitive displacement transducers, and will be sensitive over a range from 0.01 to 100 Hz, providing 2 decades of overlap with the LP. A sensitivity better than 10^{-11} g over virtually the entire frequency range is planned. The rate of data sampling will be programmable, and can range from 300 sps to 0.1 sps, depending on the available downlink capability. The mass of the UBB seismometer (less deployment device) will be less than 1.3 kg, and the power requirement will less than 0.5 W. It will be designed to withstand a g-load of 350 g over 15 msec, consistent with the InterMarsnet landing specification. Effective thermal shielding, combined with active thermal control (with a maximum power usage of 100 mW), will allow deployment of the sensor on the Martian surface, with temperature variations at the sensors kept to within 10^{-4} K over 10 minutes and 10^{-2} K over longer periods. The complete mass of the seismic instrument, 3.5 kg, includes its deployment system, electronics, packaging, and cables, and should fit within either the Mars Surveyor and InterMarsnet payload constraints.

Reference: [1] S. C. Solomon et al. (1991) Scientific Rationale and Requirements for a Global Seismic Network on Mars, LPI Tech. Rept. 91-02.

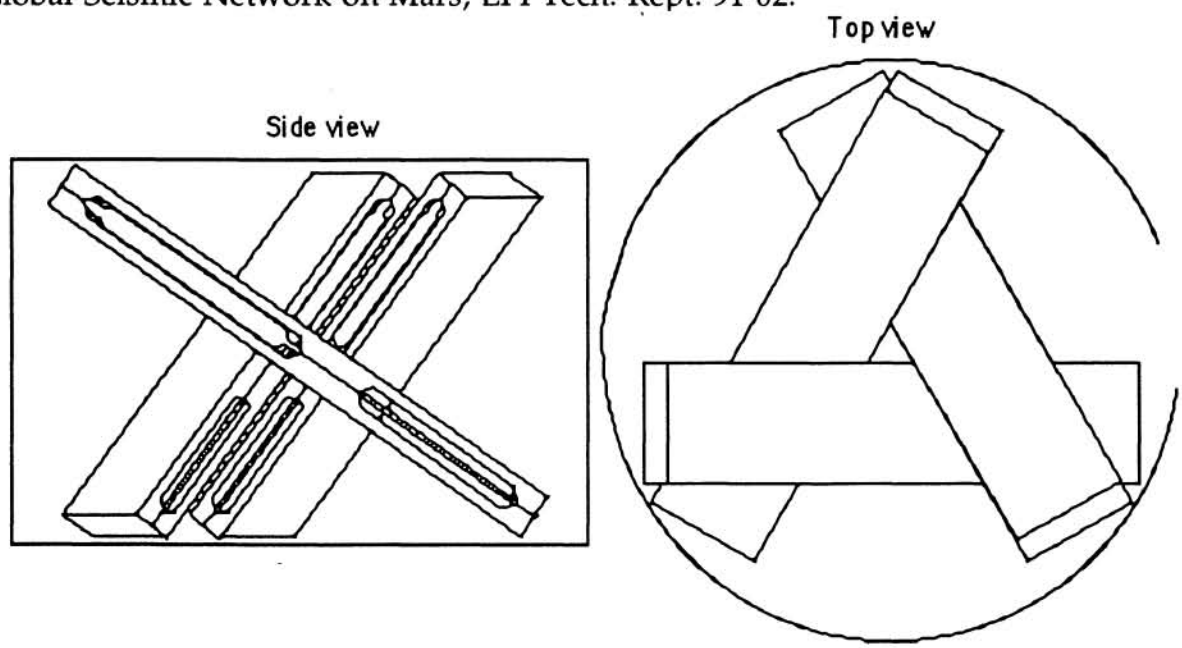

Figure 1. Three–axis SP sensor assembly (actual size). All sensor electronics fit within the cylinder shown.