UPDATE ON THE IMAGER FOR MARS PATHFINDER (IMP). P.H. Smith, D.T. Britt, L.R. Doose, R.B. Singer, M.G. Tomasko (LPL), F. Gliem (TUB, Germany), R. Greeley, R. Sullivan (ASU), H.U. Keller (MPAe, Germany), J.M. Knudsen (Orsted Institute, Denmark), and L.A. Soderblom (USGS).

The Imager for Mars Pathfinder (IMP), the primary imaging instrument for the Mars Pathfinder Lander, has been under development at the University of Arizona and Martin Marietta Technologies since December 1993. The basic configuration of the camera, the experimental design, and a comparison between IMP and the Viking Lander Camera was presented at the 25th LPSC [Smith et al., LPSC XXV, 1293-4]. Since that time a number of significant enhancements have been incorporated into the IMP design, and the IMP Engineering Model has been delivered and extensively tested. In addition, the designs of IMP sub-experiments (Wind Socks and Magnetic Properties Arrays) have been finalized in their flight configurations.

Camera Configuration: The change to the IMP design that may have the greatest impact on Pathfinder science return has been the incorporation of a second 12-position filter wheel in addition to the filter wheel in the baseline design. The original design called for a filter wheel on only one "eye" of the IMP binocular imager. Shown in **Figure 1** is the current IMP configuration with two 12-position filter wheels. Both filter wheels are mounted on the same stepper motor shaft to minimize moving parts. The advantage of this approach is that it greatly increases the filter capabilities of the IMP and the filters in each eye are permanently matched for their performance and expected illumination levels. This is of particular significance for the atmospheric filters which are designed to directly image the Sun. During the atmospheric experiments each eye will have identical narrow band (5 nm FWHM) filters with neutral density coatings to restrict peak transmission to approximately 0.1%. Shown in **Table 1** is the configuration of the IMP filters.

Table 1

Left Eye		Filter	Right Eye		
Band Center (nm)	FWHM (nm)	Position	Band Center (nm)	FWHM (nm)	
450	5	1	450	5	
890	5	2	890	5	**Atmospheric**
925	5	3	925	5	**Science**
935	5	4	935	5	
750	20	5	750	20	**Stereo**
800	20	6	670	20	
860	20	7	600	20	**Geological**
900	30	8	530	30	**Science**
930	30	9	Diopter Lens		
965	35	10	480	30	
1000	35	11	400	40	
440	35	12	440	35	**Stereo**

Included in the geological filter set are two filter positions (four filters) for color stereo imaging. This will allow improved topographic resolution and help separate albedo from shade in stereo terrain analysis. The other addition to the filter set is a diopter lens to allow close-up viewing of a miniature magnetic properties array that will be mounted on the camera yoke less than 10 cm from the camera windows. This array will collect magnetic dust settling from the atmosphere and its proximity to the camera will provide 200 μm per pixel resolution of the dust grains. The dust grains are probably much smaller than 200 μm, but the camera will be able to resolve the chains that grains form in the magnetic force lines of the array. The morphology of these chains can be diagnostic of the mineralogy of the magnetic species. The IMP

experiment has also added a sun recognition algorithm to its flight software. This will allow the IMP to locate the Sun with respect to the lander within less than 1° during the first morning of Pathfinder landed operations. Early and accurate identification of the lander's position relative to the Sun is critical for operation of the lander high-gain antenna and assuring high rates of data return.

Magnetic Properties Experiment: The scientific goal of the IMP Magnetic Properties Experiment is to identify the magnetic minerals in the Martian soil and airborne dust. The experiment includes four arrays of five circular "bullseye" magnets each and the small yoke-mounted array with two magnets. All the arrays consist of magnets of varying strengths and imaging the distribution of magnetic material on the different magnets will be diagnostic of material's mineralogy. The four larger arrays include magnets of 5, 11, 21, 45, 130 Tm^{-1}. Two arrays are mounted on the lander, one on the electronics box and one on the lander base. Two additional arrays will be built into the Pathfinder Micro-Rover deployment ramps. This location will put the magnets close to the soil and allow the rover to measure the accumulated magnetic dust with the Alpha-X-ray Proton Spectrometer.

Wind Sock Experiment: The IMP Wind Sock Experiment consists of an array of three counter-balanced cone-shaped aluminum "wind socks" spaced along a one meter mast that will be deployed after landing. The mast will support not only the wind socks but also several temperature and wind sensors for the Atmospheric Structure/Meteorology Team. The scientific goals of the IMP wind sock experiment are to measure the direction, speed, and the boundary-layer velocity profile of the local Martian wind. These measurements will allow us to characterize the aeolian processes at the Pathfinder landing site including particle threshold and the aerodynamic surface roughness. The socks are set 33.1, 62.4, and 91.6 cm above the base of the ASI/Met mast and will be imaged by the IMP every daylight hour to provide a continuous record of wind parameters. The windsock images will be sub-framed, processed on-board, and compressed to minimize the downlink data requirements.

Schedule: The IMP flight hardware is currently being assembled and tested at Martin Marietta Technologies in Denver. The project is on schedule for a delivery to JPL on September 15, 1995. Pathfinder is scheduled to launch December 1996 and land in the Ares-Tiu Valles Outflow Channel on July 4, 1997.

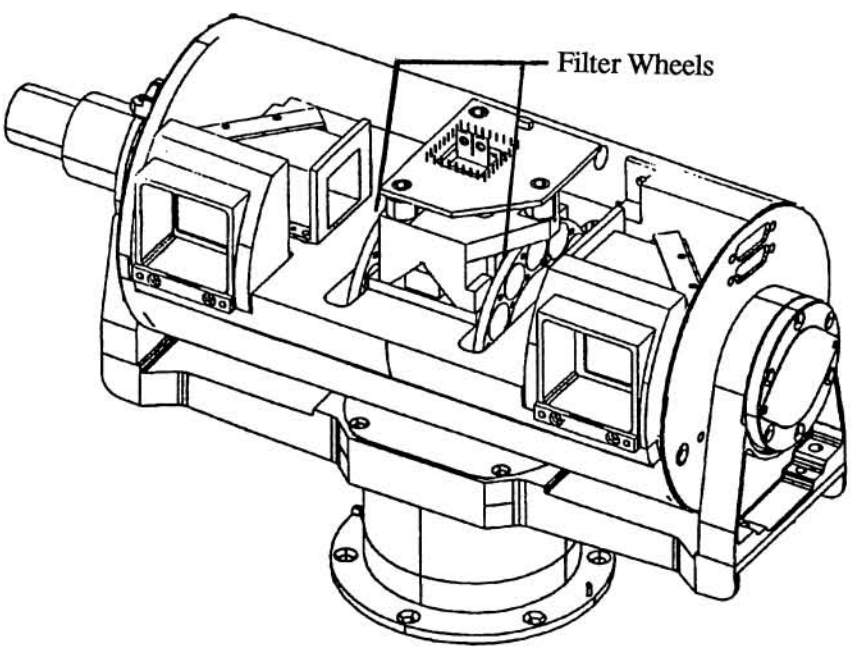

Figure 1: Cutaway view of the Imager For Mars Pathfinder. For scale, the stereo separation between the eyes is 15 cm.