TECHNICAL CHALLENGE, SCIENTIFIC THRILL: A LONG TERM LANDER ON AN ACTIVE COMET, S. Ulamec, B. Feuerbacher and K. Wittmann, DLR Institute for Space Simulation, D-51140 Köln, FRG; H. Rosenbauer, Max Planck Institute for Aeronomie, D-37191 Katlenburg-Lindau, FRG; G. Haerendel, Max Planck Institute for Extraterrestrial Physics, D-85740 Garching, FRG; F. Lura, DLR Institute for Space Sensor Technology, D-12489 Berlin, FRG

As part of the payload of the European ROSETTA Mission, dedicated to orbit around an active comet (P/Wirtanen) two surface science packages are currently foreseen. One of them shall be provided by NASA/JPL and CNES the other by an international consortium of European institutes under German lead [1]. It will be a long term (about 1 year) station, planned to land 3-axis stabilized keeping mobility as an option. A scientific payload of at least 12 kg will allow the investigation of the chemical and physical properties and the mineralogy of the surface material, the internal structure of the comet nucleus and the mechanisms driving its activity.

Cometary matter is expected to be the most primitive material in the Solar System. It has hardly changed during the last 4.6 billion years since the formation of the Solar System. Therefore the investigation of comets in general and the composition of their nuclei in particular are of great scientific interest. The European ROSETTA Mission is the logical next step after the successful flyby missions to comet P/Halley by five spacecraft in 1986. It is planned to be launched in the year 2003, and shall reach the target comet (P/Wirtanen) in 2011. ROSETTA will orbit Wirtanen during a large fraction of the comets orbit around the sun. Detailed mapping of the surface of the nucleus as well as in situ investigation of gas and dust are foreseen. Additionally, there will be the two surface science packages, one of them, described in this paper, called RoLand (after ROsetta LANDer).

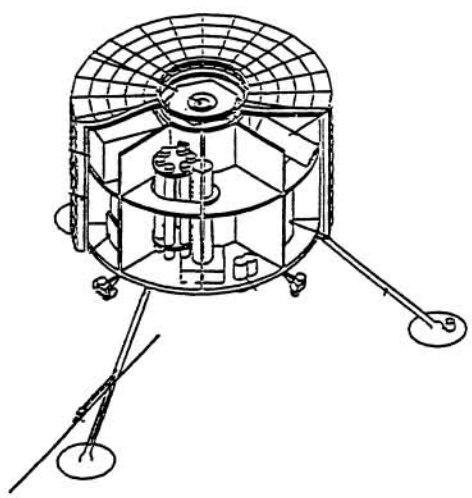

Figure 1: *Setup of the proposed RoLand Comet Lander*

The currently planned mission scenario of RoLand foresees a separation from the main spacecraft at a distance of 3 AU to the sun and about 2 km from the surface of the comet.

RoLand will descend stabilized by a set of cold gas thrusters and impact with a velocity below 1 m/s. The surface of the lander is covered with low-temperature solar generators that provide about 4 W power for the scientific instruments. Special effort has been taken for an optimized thermal insulation, since the length of the night-periods is unknown. RoLand will operate interactively for several months including drilling activities and eventually even a mobile phase towards the end of the mission.

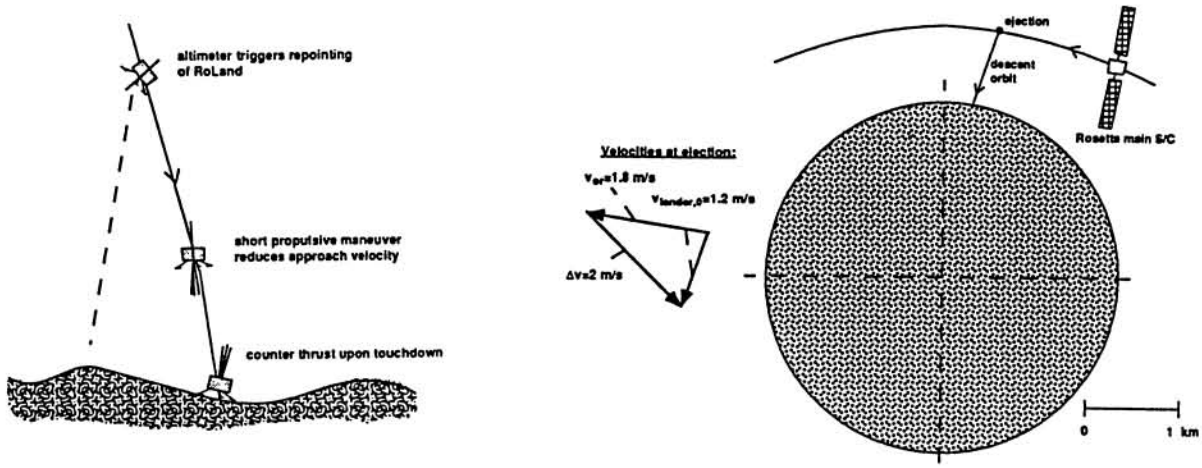

Figure 2: *Landing Scenario of RoLand*

The concept of a long term station has been chosen for several reasons. Since the material on the cometary surface will not be totally unchanged, primordial matter, an analysis of the modification during an approach to the sun will allow an extrapolation to the original properties of the material. Measurements of the heat and mass transport close to the surface as well as several kinds of interactive experiments like e.g. drilling and selected analysis of the subsurface material with different instruments, will require an operation time considerably longer than a few hours. A combined lander-orbiter microwave instrument will require several orbital periods of the main spacecraft in order to allow detailed investigation of the interior of the nucleus. A long term mission adds flexibility allowing for a broader range of comet physical parameters.

The model payload of RoLand consists of an α-proton-x-ray spectrometer, a γ-spectrometer, a gas and solid analyzer, a penetrating and sampling device, cameras (for panorama and microscopic observation), a seismometer, a magnetometer, several thermo-sensors and a microwave instrument. The announcement of opportunity, for science instruments has been sent out March 1 1995, proposals are due to August 1.

The Rosetta mission and especially the Surface Science Packages will contribute essentially to our understanding of the formation of the Solar System. It gives the unique opportunity for in-situ analysis of material that contains a record of past events during the last 4.6 billion years retained in relatively unaltered form.

[1] *RoLand, Cometary Lander of the ROSETTA Mission*; Proposal to ESA, Oct. 1994 [2] Whipple, F. L., *Astron. Astrophys.*187, p.852-59, 1987 [3] *Rosetta – A Comet Nucleus Sample Return Mission*; ESA-SP-1125, 1991; [4] *Physics and Mechanics of Cometary Material*; ESA-SP-302, 1991