LOCAL AND GLOBAL NETWORKS FROM MARS96 HRSC AND WAOSS IMAGERY;

H. Ebner, T. Ohlhof, Chair for Photogrammetry and Remote Sensing, Technical University Munich,
Email: timm@photo.verm.tu-muenchen.de

SUMMARY. For the forthcoming Mars96 mission a procedure for high quality point determination based on an extended, physically consistent bundle block adjustment has been developed and verified using simulated and practical data. The procedure serves to reconstruct the exterior orientation of the two stereo cameras HRSC (High Resolution Stereo Camera) and WAOSS (Wide-Angle Optoelectronic Stereo Scanner), to improve the existing Mars control network in accuracy and density, and to determine non-photogrammetric model parameters, e.g. the Mars rotation parameters, more accurately.

MARS96 HRSC/WAOSS EXPERIMENT. The Russian Mars96 spacecraft is scheduled for launch in November 1996. The German stereo cameras HRSC and WAOSS are some of the most important instruments of the spacecraft. They will be operated in a highly elliptic Mars orbit to image the planetary surface at local, regional and global scale. From the recorded imagery the terrain surface will be reconstructed 3-dimensionally by photogrammetric means.

The photogrammetric evaluation of the HRSC/WAOSS data starts with the precise reconstruction of the exterior orientation of the images and the determination of ground points on Mars within the scope of a bundle block adjustment. Besides image information represented by a large amount of conjugate points which are measured automatically, control information is required for point determination. Due to the lack of accurate ground control points and navigation systems like GPS or INS, orbit and attitude determination of the Mars96 spacecraft are of high importance. The orbit determination is based on range and Doppler tracking between the Mars96 spacecraft and ground stations on Earth, and attitude information is derived from gyro readings and images taken by a star camera. A detailed description of the HRSC/WAOSS experiment and the photogrammetric processing chain is given in [1] and [2].

In order to properly utilize the image information contained in conjugate point coordinates and the orbit information contained in tracking data, both data types have to be evaluated in a combined adjustment process. To this end, the conventional bundle block adjustment algorithm is supplemented by a rigorous dynamical modeling of the satellite motion to take orbital constraints into account [3]. For the first time orbit determination results are rigorously incorporated into the bundle block adjustment, which is equivalent to a combined adjustment of tracking and image data. The proposed concept guarantees the proper utilization of orbit information in the bundle adjustment and, vice-versa, enables the use of image information to improve the orbit determination and to support the estimation of scientific parameters (e.g. Mars rotation parameters).

LOCAL, REGIONAL AND GLOBAL POINT DETERMINATION. The point determination (PD) on Mars will be carried out at local, regional and global levels (Table 1). The interior accuracy of PD results from a local datum definition using the method of free adjustment. The exterior accuracy of PD is related to the global Mars-fixed reference system. Comprehensive computer simulations on local, regional and global PD have been performed to obtain a survey of the attainable interior and exterior accuracies and to give recommendations in the planning phase of the Mars96 mission [4]. The results of these simulations are summarized in Table 2.

The local PD is based on HRSC images, which will be acquired around the periapsis with 12–20 m ground pixel size. The accuracy mainly depends on the number, distribution and precision of conjugate points and benefits from the high relative accuracy of the orbit and attitude data. If the full imaging capability of HRSC is utilized, an interior accuracy of 5 m in planimetry and 10 m in height can be obtained.

A large number of simulation runs on regional PD have shown that most accurate results can be achieved by combining HRSC and WAOSS data and by the simultaneous block adjustment of multiple overlapping strips with $\geq$60% side lap and additional crossing strips at the borders of the block.

Since WAOSS will image the entire planet, a global block with complete overlap in all directions may be processed under ideal circumstances. Because of the extraordinary strength of the closed block and based on the complete image, orbit, attitude and ground control information, an exterior accuracy of 70 m in planimetry and height can be achieved.

LOCAL AND GLOBAL NETWORKS FROM MARS96 IMAGERY: **Ebner H., Ohlhof T.**

	Local PD	Regional PD	Global PD
Images	HRSC	HRSC, WAOSS	WAOSS
Datum definition	local	local or global	global
Block configuration	single strips; small blocks of overlapping strips	large blocks of many overlapping strips	closed block covering the entire surface
Computation effort	moderate	high	very high

Table 1: Local, regional and global point determination (PD) on Mars and their characteristics

	Interior Accuracy		Exterior Accuracy	
	$\mu_{\hat{X}\hat{Y}}$[m]	$\mu_{\hat{Z}}$[m]	$\mu_{\hat{X}\hat{Y}}$[m]	$\mu_{\hat{Z}}$[m]
Local PD	5	10	—	—
Regional PD	15	30	100	50
Global PD	—	—	70	70

Table 2: Attainable planimetric and height accuracies ($1\,\sigma$) of adjusted object point coordinates for the local, regional and global PD on Mars

In case of the global PD, special emphasize is given to the Mars rotation parameters, which define the link between the Mars-fixed object coordinate system as the reference frame for photogrammetry, and the inertial Earth equator and equinox of J2000 coordinate system as the reference frame for orbit determination. The Mars rotation parameters contain the right ascension α_0 and declination δ_0 of the Mars north pole, the longitude W_0 of the prime meridian with respect to the IAU vector at the reference epoch J2000, the rotation rate $\dot{W}$, and the Mars precession rate $\langle\dot{\psi}\rangle$. Here, the IAU vector is defined as the intersection line of the planes described by the Earth equator of J2000 and the Mars equator [5].

By combining image and tracking data, as described above, the Mars rotation parameters may be treated as estimation parameters within the bundle adjustment. It can be seen from Fig. 1 that the accuracies of the Mars rotation parameters in the global block adjustment can be improved up to factor 4.

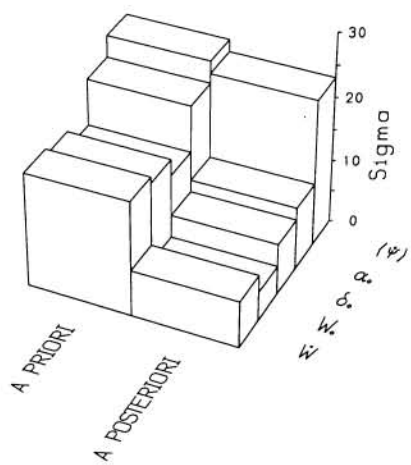

Figure 1: Standard deviations a priori and a posteriori (after block adjustment) of the Mars rotation parameters ($\langle\dot{\psi}\rangle$[″/cy], α_0[″], δ_0[″], W_0[°/1000], $\dot{W}$[″/d·1000]) for the global Mars block

In summary, it can be stated that the synergy effect of image and orbit information is most effective, if many orbital arcs are processed simultaneously in a block of high geometric strength. It can be expected that the accuracy of the current ground control network of Mars will be improved by a factor of 10 or more.

REFERENCES. [1] Albertz J. et al. (1993): GIS **6**(4), 11–16. [2] Ebner H. et al. (1994): ZPF **62**(2), 57–71. [3] Montenbruck O. et al. (1994): DLR-FB 94-13, 95 p. [4] Ohlhof T. (1995): PhD thesis, DGK, C 445, 139 p. [5] Davies et al. (1992): Celestial Mechanics **53**, 377–397.