PLANNED DIGITAL TERRAIN MODEL PRODUCTS FROM SELENE TERRAIN CAMERA DATA

J. Haruyama[1], M. Ohtake[1], T. Matunaga[2] , T. Morota[1], A. M. Yoshizawa[1], and LISM working group, [1]Institute of Space and Astronautical Science / Japan Aerospace Exploration Agency, Yoshinodai 3-1, Sagamihara City, Kanagawa 229-8510, Japan. (haruyama.junichi@jaxa.jp) [2]National Institute for Environmental Studies, 16-2 Onogawa, Tsukuba city, Ibaraki 305-8506, Japan.

Introduction: The Terrain Camera (TC) is a high-resolution stereo imager[1,2,3] that will be launched on board Japanese moon explorer SELENE in 2007. TC will carry out global stereo mapping with 10m/pixel resolution with two slant, a forward looking telescope and a backward looking, telescopes (see Figure 1). Each slant angle is 15º referred to the nadir, or base to height (B/H) ratio is 0.57, thus the height resolution of Digital Terrain Model (DTM) produced from the TC stereo data is expected to be 20m or better. The TC technical parameters are listed in Table 1.

The DTM from TC data will be the first terrain model covers the entire surface of the Moon with 10m spatial resolution, and used for the various fields of lunar sciences. The certain and swift production of the DTM is demanded. With the launch near at hand, we are harrying to develop the TC DTM production system[4]. In this paper we will introduce the planned TC DTM products.

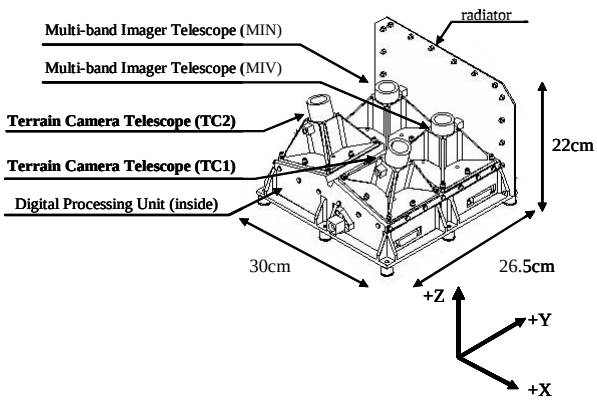

Figure 1. SELENE Terrain Camera Configuration

Overview of Digital Terrain Model products from Terrain Camera: TC data received at the Usuda Deep Space Center will be sent to the SELENE Operation and Analysis Center (SOAC) and cut into rectangle "scenes" by a definite line number with an overlap. The planned line numbers of net and overlap are 4088 and 568, respectively. The cut data named as TC level 2A (L2A) data will be stored in the SELENE data base (L2DB) system in SOAC. TC L2A data will be input data of three TC Digital Terrain Model (DTM) products: 1) TC DTM/Ortho data set, 2) TC DTM map data set, 3) TC ortho map data set. These data sets will have PDS file format, and be delivered via L2DB system.

DTM/Ortho scene data set: A TC DTM/Ortho data set consists of a catalogue information file, a thumbnail file, a PDS label (detached form), and a DTM/Ortho tar object file that contains a DTM file, a quality flag file, and a TC ortho file that are attached PDS labels, respectively (see Figure 2). DTM file data is a latitude x longitude x height data, mapped in simple cylindrical for the data of lower latitude areas than ± 60º, and in polar stereo for the data of higher latitude areas than > ±60º. Its data type will be 16bit signed short integer with big endian. The quality flag files have information of each pixel of DTM files such as defect pixel, abnormal height value, and shadow area pixel. Each pixel of TC ortho file data has reflectance value, and its geometric parameters are corresponding to those of DTM file data. For transformation of reflectance from radiance, we are planning to use Hapke relation. TC ortho data type is 16bit unsigned short integer with big endian. Catalogue information files in which we will describe principal information of the data and thumbnail files are used for retrieval from L2DB. The planned retrieval keywords in catalogue information file of TC DTM/Ortho data set are listed in Table 2.

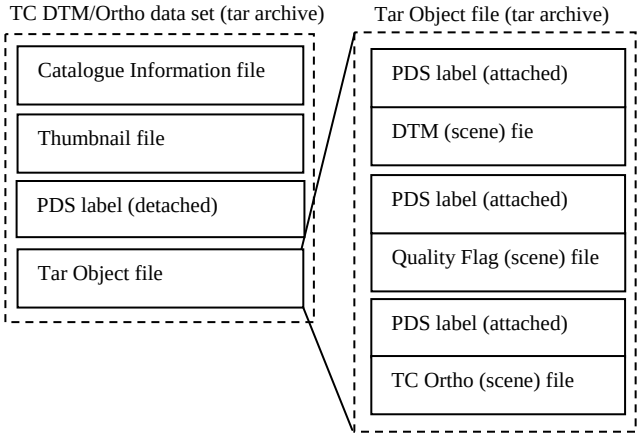

Figure 2. TC DTM/Ortho file structure

DTM/Ortho map data set: We will public the global TC DTM/Ortho map data via L2DB system. These map data are produced by mosaic of TC DTM/Ortho scene data, and the data type of DTM map data is 16bit signed short integer with big endian, and TC ortho map data is 16bit unsigned short integer with big endian. Though we will registered these map data set in L2DB with map projection type of simple cylindrical and resolution of 13m or 7m /pixel, users can get the map data with choosing a projection type from various ones (e.g. simple cylindrical, Lambert conformal, Mercado, etc.), and defining resolution arbitrary in pixel/degree. We aim to complete the first TC DTM/Ortho global maps till one year after the end of the production of TC DTM/Ortho scene data for the entire of the Moon.

Table 1. Terrain Camera technical parameters

optics	stereo (*1)
imaging	push-bloom method
base to height ratio	0.57 (*2)
slant angle	TC1: +15º ± 0.009º
	TC2: -15º ± 0.009º (*3)
sensor pixels	4096 pixels
pixel size	7μm x 7μm
IFOV	TC1: 0.005536º (=0.09662mrad)
	TC2: 0.005522º(=0.09638mrad)
IFOV on ground	10m (*4)
swath mode	3 (*5)
	nominal: 3500pixel
	full: 4096pixel
	half: 1750pixel
FOV	nominal: 22.4º
	full: 19.3º
	half: 9.7º
swath width on ground	nominal: 35km
	full: 41.0km
	half: 17.5km
focal length	TC1: 72.45mm
	TC2: 72.63mm
diversity	TC1: < ±0.15% (*6)
	TC2: < ±0.15% (*6)
aperture	TC1: 18.25mm
	TC2: 18.25mm
F number	TC1: 3.97
	TC2: 3.98

*1: forward and backward looking *2: at 100 km SELENE altitude *3: + is SELENE +x direction *4: at 100 km SELENE altitude *5: by commands *6: design value

Table 1. (continue)

spectral range	0.43- 0.85 μm (*7)
vegnetting	TC1: < 8.3% in ± 9.65º
	< 23.5% in ± 11.2º
	TC2: < 8.1% in ± 9.65º
	< 23.9% in ± 11.2º
MTF	TC1: > 0.28 in ± 5º
	> 0.20 in ± 10º
	> 0.11 in ± 11.2º
	TC2: > 0.21 in ± 5º
	> 0.19 in ± 10º
	> 0.11in ± 11.2º
S/N	TC1: > 190
	TC2: > 174(*8)
sampling time	TC1: 6.500msec
	TC2: 6.500msec
exposure mode	3 (*9)
	long: 6.5msec
	middle: 3.25msec
	short:1.625msec
Instauration reflectance	> 6% (*10) @ long (*11)
	>12% (*10) @ middle(*11)
	>24% (*10) @ short (*11)
A/D converter	10bit
linearity	TC2 < ± 2%
	TC2 < ± 2%
Compression mode	non-compression mode and DCT compression modes (*12)

*7: panchromatic *8: considering 0.5.DN margin for noise from other instruments *9: by commands *10: nearly 700DN *11: exposure mode *12: selectable from 32 Q -tables by commands

Table 2. TC DTM/ Ortho Primary Key Words in catalogue information file

Data File Name	Processing Level (**2)	Scene Number	Lower Left Latitude
Data File Size	Product ID (**3)	Strip Number	Lower Left Longitude
Data File Format	Product Version (**4)	Location Flag (**5)	Lower Right Latitude
Thumbnail File Name	Access Level	Upper Left Latitude	Lower Right Longitude
Thumbnail File Size	Start Date Time	Upper Left Longitude	Scene Center Latitude
Thumbnail File Format (**1)	End Date Time	Upper Right Latitude	Scene Center Longitude
Instrument Name	Revolution Number	Upper Right Longitude	Comment Information (**6)

Here "Primary key words" are common key words for all SELENE products archived in L2DB.
**1: JPEG (fix) **2: DTM (fix) **3 TC_DTM_ORTHO (fix) **4 archive version at L2DB **5 Ascending (A), Descending (D), including north pole (N), including south pole (S), including north and south poles (W) **6 including Product Creation Time, BaseLevel2A File Name, Mission Phase Name, Q-table ID, Huffman Table ID

Table 3. TC DTM/Ortho Free Key Words in catalogue information file

DTM Minimum	TC Ortho Maximum	DTM QA Percent Bad Pixel	Solar Azimuth angle
DTM Maximum	TC Ortho Average	DTMQA Percent Shadow Pixel	Spacecraft Altitude
DTM Average	TC Ortho Standard deviation	Incident Angle	DPU Temperature
DTM Standard deviation	TC Ortho Mode Pixel	Emission Angle	
DTM Mode Pixel	DTM QA Percent Dummy Pixel	Phase Angle	

"Free key words" are proper key words of each product in L2DB.

References:

[1] Haruyama, J et al. (2000) *LPSC XXXI,* Abstract #1317. [2] Haruyama, J. et al. (2003) *ISTS 2002 proceedings*, 1992-1996. [3] Haruyama, J. et al. (2005) *ISTS 2004 proceedings*, 857-862. [4] Haruyama, J. et al. *Advances in Geosciences 2005* (in print).