Vulcan TP/PDA - A Modular Materials Processing System for Proprietary R&D. Ruel. A. (Tony) Overfelt, Executive Director, National Air Transportation Center of Excellence for Research in the Intermodal Transport Environment, Auburn University, 275 Wilmore Laboratory Building, Auburn, AL 36849, Tel: (334) 844-5940, E-mail: overfra@auburn.edu .

Introduction: Over the years, materials processing in space has generated both scientific and commercial interest due to the uniqueness of the low-g environment on many fluids-based processes. In September 2009, the Materials Science Research Rack was installed in the U.S. Destiny Laboratory. This new facility will provide the scientific community with significant new capability for advanced scientific investigations.

The entrepreneurial commercial community also needs access to the low-g environment of space to enable the development of high value data, processes and materials. Materials and process data that improves the competitiveness of manufacturing industries can have significant financial value. One area where basic materials data can be exploited to improve process design is in thermophysical properties of molten metals and alloys. Basic knowledge of properties like thermal diffusivity, viscosity, density, heat capacity, surface tension, etc. are important in the design of steel mills, casting plants, semiconductor crystal growth, welding processes, etc.

Various techniques for the measurement of thermophysical properties of materials have been developed over the years and recent research and development has focused on molten metals. Unfortunately, the standard earth-based techniques often cannot be confidently applied to high temperature, reactive melts due to contamination from the crucibles required to hold the samples in earth's gravity.

Flexible Space Hardware: Auburn University developed a modular research instrument to melt and test important industrial alloys in low-g. The Vulcan-TP/PDA integrated thermophysical property measurement device, shown in Figure 1, enables multiple thermophysical property measurements to be performed on containerlessly processed samples of a range of molten metals.

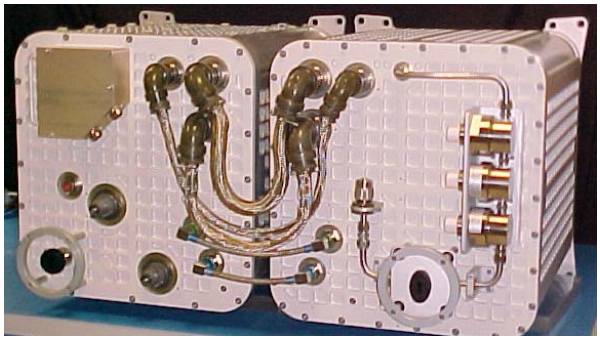

Figure 1. Vulcan-TP/PDA space experiment modules

The Vulcan-TP/PDA instrument carries 18 samples and can be controlled by scientists and engineers on the ground via teleoperation. The Vulcan-TP/PDA is comprised of two containers called Universal Small Experiment Containers (USECs) originally planned for operation in an ISS EXPRESS Rack. The USEC is a uniquely designed payload containment system of Wyle Corporation. The containment system is equivalent in size to two space shuttle mid-deck lockers. Vulcan-PDA (Power and Data Acquisition) contains the electronics for the experiment and provides the interface with the spacecraft/EXPRESS Rack for power, data and cooling. Vulcan-TP (Thermophysical Properties) contains the experiment hardware and provides the interface to the spacecraft/EXPRESS rack vacuum exhaust system.

The thermophysical properties experiment of Vulcan-TP is shown in Figure 2 and is comprised of an automated sample handling assembly, which transfers samples into an induction coil inside a vacuum chamber. A vacuum of $1x10^{-3}$ Torr is achieved via the vacuum exhaust system of an EXPRESS Rack and an internal turbomolecular pump further decreases the pressure to $1x10^{-6}$ Torr. As a sample is heated, data are gathered via video cameras, motion sensors and an infrared sensor attached to various ports on the vacuum chamber.

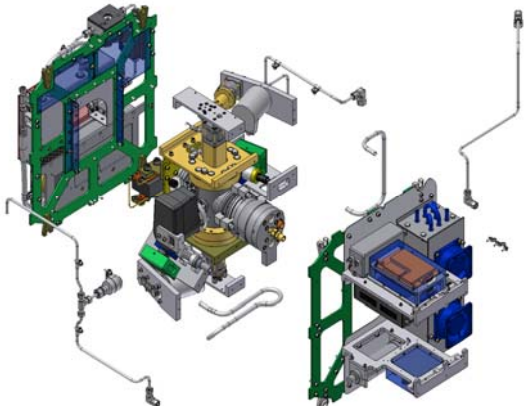

Figure 2. Exploded View of the Vulcan-TP Experiment Module

Video and data are recorded in Vulcan-PDA and downlinked to the ground via spacecraft/EXPRESS Rack data and video links. The Vulcan-TP/PDA uses two 500-watt power inputs and communicates with the ground via an Ethernet connection. See Figure 3. Required cooling, as currently designed, is provided by the ISS medium temperature water loop that interfaces with an internal water loop via a water-to-water heat exchanger inside Vulcan-PDA. Connections between the Vulcan-TP and Vulcan-PDA transfer power, commands, data and cooling between the containers.

Future Capabilities: The two separate container design of the Vulcan-TP/PDA Modular Materials Processing System enables new and considerably different material processing experiments to be developed quickly and at low cost. The dedicated thermophysical properties experiment in the Vulcan-TP module could be replaced with a wide variety of different experiments. For example, directional solidification experiments with metals and/or semiconductor materials or vapor crystal growth experiments could be designed and housed within a new experiment module powered and controlled by the existing Vulcan-PDA.

Acknowledgments: The author gratefully acknowledges the financial support and encouragement received from NASA over the years. In addition, special thanks are due to Charlie Adams, Steve Best, Henry Cobb, Mike Crumpler, Ron Giuntini, Barbara Howell, John Marcell, L.C. Mathison, Don Sirois, Deming Wang and Rick Williams for their many contributions to the development of Vulcan TP/PDA.

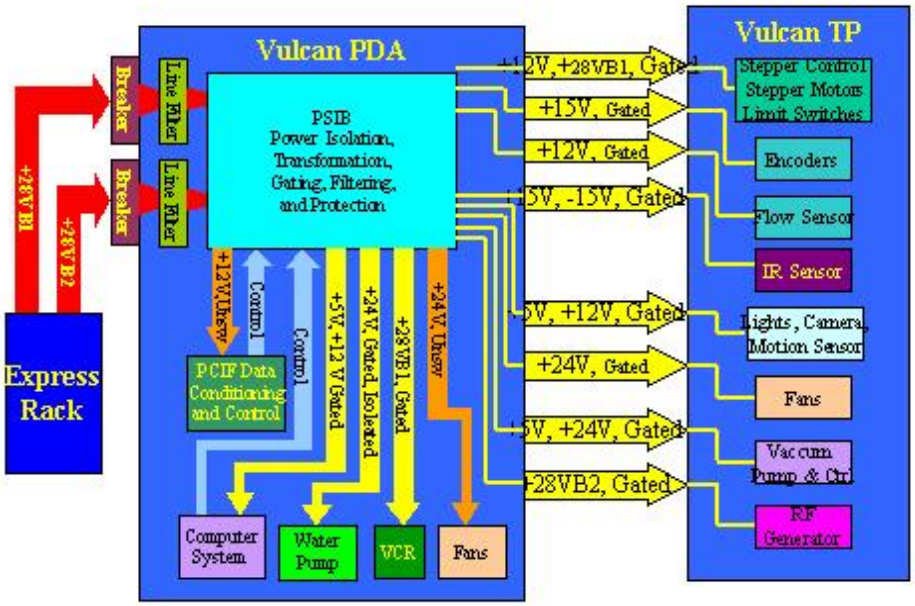

Figure 3. Schematic of the Vulcan-TP/PDA Instrument