THE PRIMA ASTROMETRIC PLANET SEARCH PROJECT. R. Launhardt, H. Baumeister, P. Bizenberger, Th. Henning, J. Setiawan, K. Wagner, *Max Planck Institut für Astronomie, Heidelberg, Germany (rl@mpia.de)*, W. Jaffe, J. A. de Jong, R. Köhler, R. J. Mathar, R. S. Le Poole, A. Quirrenbach, S. Reffert, *Sterrewacht Leiden, The Netherlands*, M. Fleury, C. Maire, D. Mégevand, F. Pepe, D. Queloz, D. Ségransan, D. Sosnowska, L. Weber, *Observatoire de Genève, Sauverny, Switzerland*, H. Bleuler, D. Gillet, Y. Michellod, P. Müllhaupt, L. Sache, R. Wüthrich, *Ecole Polytechnique Fédérale de Lausanne, Switzerland*, R. Dändliker, Y. Salvadé, O. Scherler, *Ecole d'Ingénieurs ARC, St-Imier, Switzerland*, H. Hanenburg, K. Murakawa, J. Pragt, L. Venema, *ASTRON, Dwingeloo, The Netherlands*, P. Ballester, F. Delplancke, F. Derie, A. Glindemann, *European Southern Observatory (ESO), Garching, Germany*, R. N. Tubbs, *Osservatorio Astrofisico di Arcetri, Firenze, Italy*.

PRIMA, the instrument for Phase Referenced Imaging and Micro-arcsecond Astrometry at the VLTI, is currently being developed at ESO. PRIMA will implement the dual-feed capability at the VLTI for both UTs and ATs to enable simultaneous interferometric observations of two objects that are separated by up to 2 arcmin, without requiring a large continuous field of view. PRIMA will be composed of four major subsystems: Star Separators, Differential Delay Lines (DDLs), a laser metrology system, and Fringe Sensor Units (FSU). The system is designed to perform narrow-angle astrometry in K-band with two FSUs and, with one FSU in combination with AMBER or MIDI, phase-referenced aperture synthesis imaging. The purpose of the DDLs in differential astrometry is to increase the astrometric accuracy by separating the large OPD correction terms which are common for the two stars from the small differential terms and to increase the sensitivity by stabilizing the fringe pattern (in a closed loop with the laser metrology) and thus allow for longer integrations.

In order to speed up the full implementation of the 10 μas astrometric capability of the VLTI and to carry out a large astrometric planet search program, a consortium lead by the Observatoire de Genève (Switzerland), the Max Planck Institute for Astronomy in Heidelberg (Germany), and the University of Leiden/NOVA (The Netherlands) agreed with ESO to build and deliver the Differential Delay Lines for PRIMA and to provide all necessary operation and software tools to perform narrow-angle astrometry at the 10 μas level.

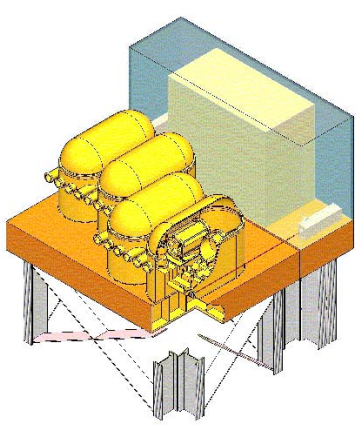

Figure 1: 3-D overview of the DDL system. The DDL bench supports four vacuum vessels each with two DDLs and two pairs of input/output windows for the dual-feed. VIS laser metrology and electronic boxes are sketched at the right.

This includes DDLs, the establishment of a full astrometric error budget, the establishment of an operations and calibration strategy, and the development of observation preparation and data reduction software.

When completed in 2007, we will use the PRIMA facility to detect and characterize extra-solar planets. Two core programs are planned to be carried out over a duration of at least three years: **1)** Observe stars with known radial-velocity planets. We will resolve the $\sin i$ uncertainty of the planet masses and thus constrain the uncertain upper end of the planetary mass function. For stars with multiple planetary systems we will derive the relative inclination of the orbits. We will follow up long-term radial velocity trends and search for new planets in longer-period orbits for which astrometry is more sensitive than the radial velocity method. **2)** Search for planets around nearby stars of different mass and age without known planets. The search for planets by the radial-velocity technique is restricted to stars with narrow and stable spectral lines, thus excluding pre-main sequence stars as well as A and most F stars. Our astrometric planet search program will explicitly include such stars. For nearby (<20pc) late-type (F-M) main sequence stars, the primary new discovery space opened by such an astrometric facility will be Saturn down to sub-Uranus-mass planets with orbital periods of a few years (a $\approx 1-5$ AU).

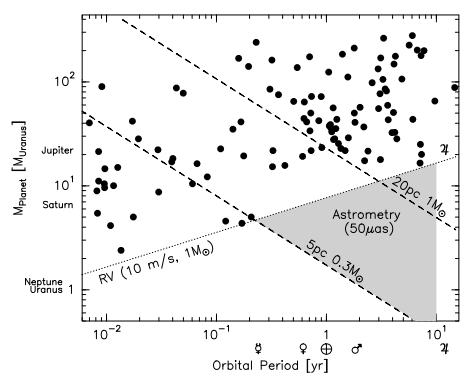

Figure 2: Planet discovery space, $M_{Pl}\,(\times\, sin\, i)$ vs. orbital period) of radial velocity searches and astrometry. Dots indicate known RV planets. The dotted line shows the detection limit of RV searches (assuming detection limit 10 m/s and 1 $M_\odot$ stars). Dashed lines indicate the astrometric detection limits (50 μarcsec) for a 0.3 $M_\odot$ star at 5 pc and a 1 $M_\odot$ star at 20 pc. The grey shaded area indicates the new discovery space of astrometry, assuming a program duration of 10 yr.