This ATM is a statement of the data subsystem test program presently being written for the DPS-2000 computer in the System Test Set. In general all processing is similar to that described in the following documents:

1. ATM 399B, section 2
2. SE 03 (formerly ATM 370)
3. ATM 547 data subsystem section

The program basically obtains mainframe sync, subframe sync (housekeeping incrementing sync pattern, 0-89), identifies mode ID, transmits commands both manually and automatically, verifies commands, transmits data to the experiment simulator and verifies data received for each experiment individually or any combination of experiments, tests housekeeping data against stored tolerances and/or previous data, and verifies the proper timing and incrementing sync pattern count occurrence corresponding to the frame mark pulse, even frame mark pulse, and ninetieth frame mark pulse.

The output from each area in the program is in real time on the MC-4000 line printer as follows:

The initialization of the program results in a printed comment, BEGIN DATA SUBSYSTEM TEST and TIME HH MM SS where HH equals hours 00-23, MM equals minutes 00-59, and SS equals seconds 00-59. Each occurrence of time print will appear in the HH MM SS format.

Mode identification is as follows for incrementing sync pattern (I.S.P) count 1-5 and subframe sync (two 90 mainframe passes in lock).

ID Bit=1, ISP=1	NORML	normal mode
ID Bit=1, ISP=2	SLOW	slow mode
ID Bit=1, ISP=3	STA A	station A
ID Bit=1, ISP=4	STA B	station B
ID Bit=1, ISP=5	STA C	station C
ID Bit=1, ISP=0, 6-89	IDERR	I.D. bit error

Command transmission is automatic from command list, or manual from external input from the System Test Set (STS). Manual/automatic mode is selected by sense switch setting. Upon command transmission in either mode, the following will be printed:

XM$0123 HH MM SS
XM transmission
$0123 command transmitted
HH MM SS time
$ = OCTAL NUMBER IN ALL CASES

Command verification word is printed whenever CV≠0. When CV≠0, it is compared to the last transmission and outputted as follows:

CV $ 0123	normal CV word received and compared to last transmission with parity bit true.
PCV ooo	indicates parity error.
CV $ 0123 NX	normal received as above, no transmission
CV $ 0122 ER $ 0123	received CV, compare ≠ to last transmission, therefore, print last command transmitted.

For a valid CV word, housekeeping data will be printed for the next ninety housekeeping words. Automatic command transmission will be inhibited during this time and normal manual transmission will be inhibited. Sense switch override is provided for immediate manual transmission.

Transmission of data is continuous for all experiments during the running of the program. Sense switch selection determines which exper iment data will be compared to data transmissions. Upon an incorrect comparison of received data with transmitted data, outputs are as follows:

PS20 T$0363 R$0362

PS - Passive Seismic
MG - Magnetometer, etc.
20 - mainframe word number
T$0363 - transmitted pattern
R$0362 - received pattern

The central station housekeeping (HK) section has the facility (using sense switches) for continuous output. In the continuous mode all HK data is printed on the line printer. When not in continuous mode and in subframe lock (after two complete cycles of 90 mainframes), HK data will be printed when it is out of tolerance, when a change from its previous value is detected, or when the data is to be printed each time it is received (no tolerance). The first 90 HK words received after an uplink command is transmitted and verification is received will be printed. Sense switch control is provided for the experimentor to turn on HK data if desired. When HK data is printed, it is identified with the code "HK" followed by the subframe word number (0-89). The data is printed in octal form and may be followed by diagnostic letter or symbolic codes indicating the reason for printing.

Codes:

C = continuous mode
OT = out of tolerance
* = change from previous value
I = initial pass of HK data

Frame mark, even frame mark, and ninetieth frame mark are checked for proper

occurrence as to the ISP count and timing. The following diagnostics will be printed:

FMTE	frame mark timing error
EMTE	even frame mark timing error
NMTE	ninetieth frame mark timing error
FMER	frame mark occurrence error
EMER	even frame mark occurrence error
NMER	ninetieth frame mark occurrence error

The accompaning functional flow chart is intended only to provide interested parties with an outline of program flow. As program debugging progresses, detailed flow charts just above the coding level will be drawn. These charts and annotated assembly listings will be appended to this document when they are available.

Prepared by: R. W. Moenart
R. W. Moenart

Prepared by: C. W. Coleman
C. W. Coleman

Approved by: R. W. Shay
R. W. Shay

Refer to Data Subsystem Block Diagram

Sub Routines

EXECQ - supervisor
START - print comments
RESTART - print comments
INIALIZE - reset all flags
HKSUB - housekeeping
CVSVB - command verify
ISPSF - ISP sync acquisition
SISUB - 3 } SIDE exit modified
= FMTST } test frame mark timing
MFRTN - recycle sync
FMEST - test frame mark occurrence
XCSUB transmit command
IDSUB - mode identification
PSSUB - passive seismic
MGSUB - magnetometer
SWSUB - solar wind
SISUB - SIDE

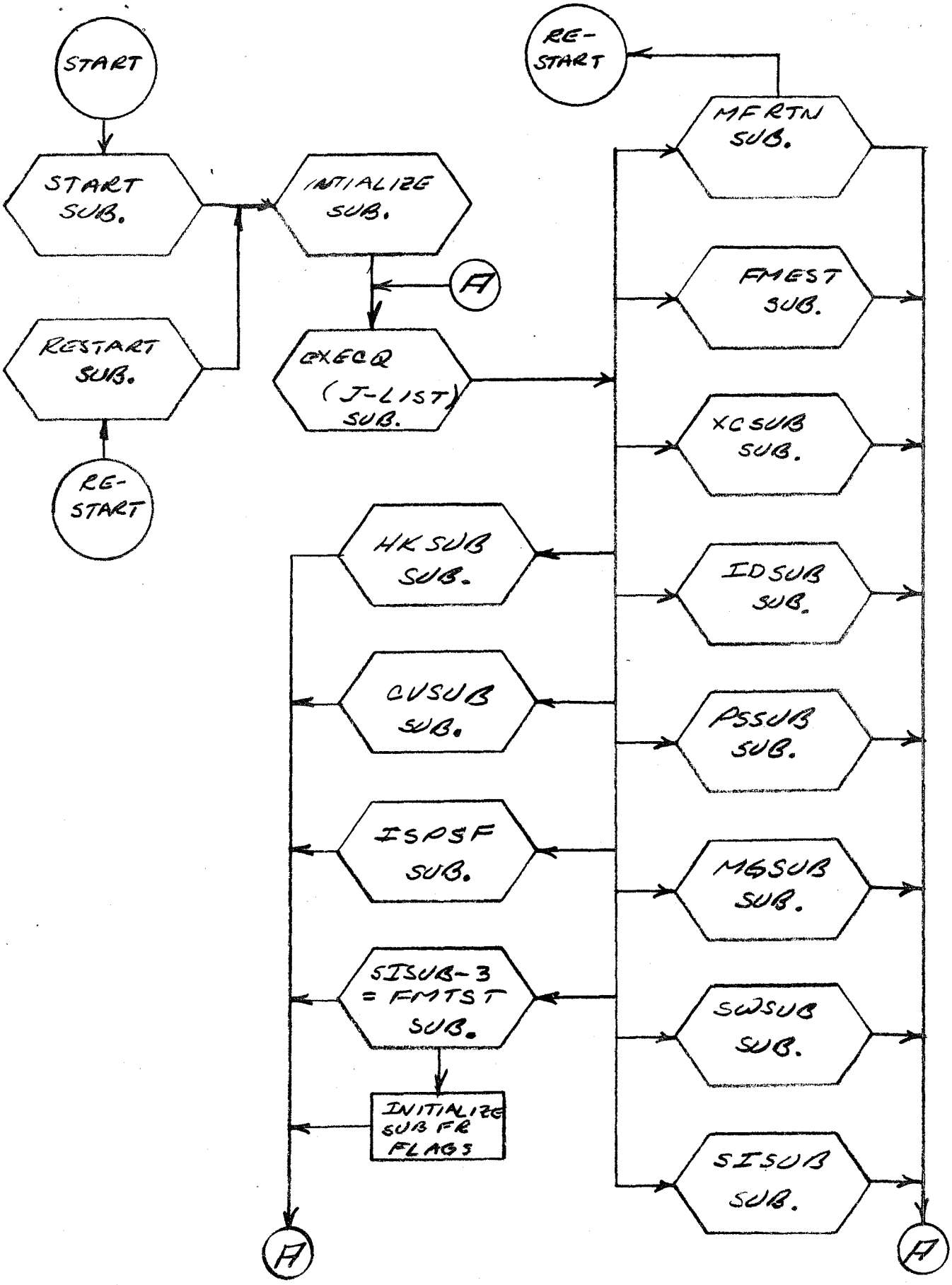

DATA SUB SYS. BLOCK DIAGRAM
25 NOV. 66

REVISED 15 NOV. 66
29 NOV. 66

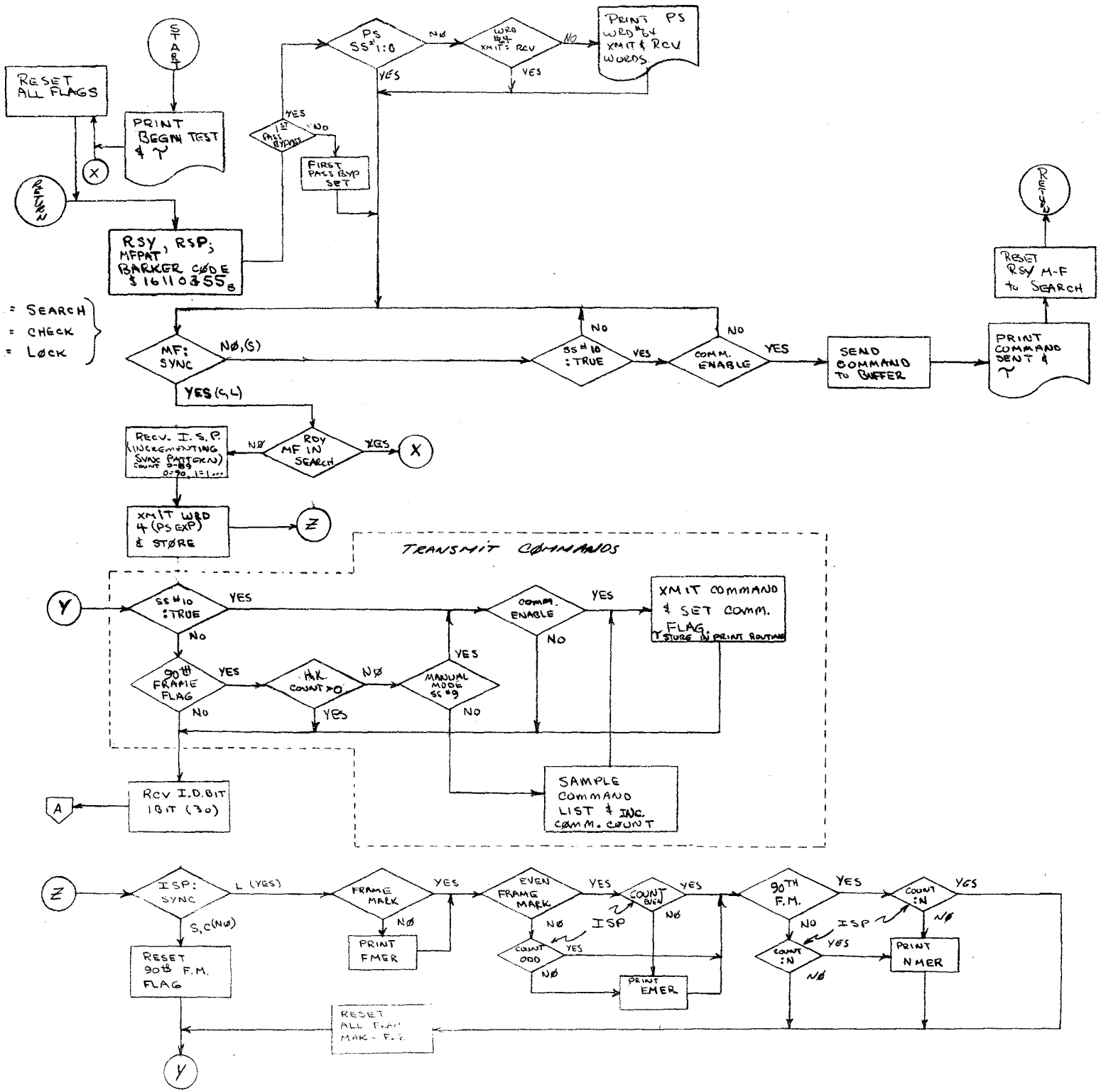

SENSE SWITCHES

#1 - PSEXP ON LINE
#2 - MAGXP ON LINE
#3 - SWEXP ON LINE
#4 - SIOXP ON LINE
#5 -
#6 -
#7 -
#8 - CONTINUOUS HOUSE KEEPING DATA PRINT
#9 MANUAL COMMAND XMIT MODE (SYNC REQUIRED)
#10 MANUAL RANDOM COMMAND XMIT MODE (SYNC NOT REQUIRED)

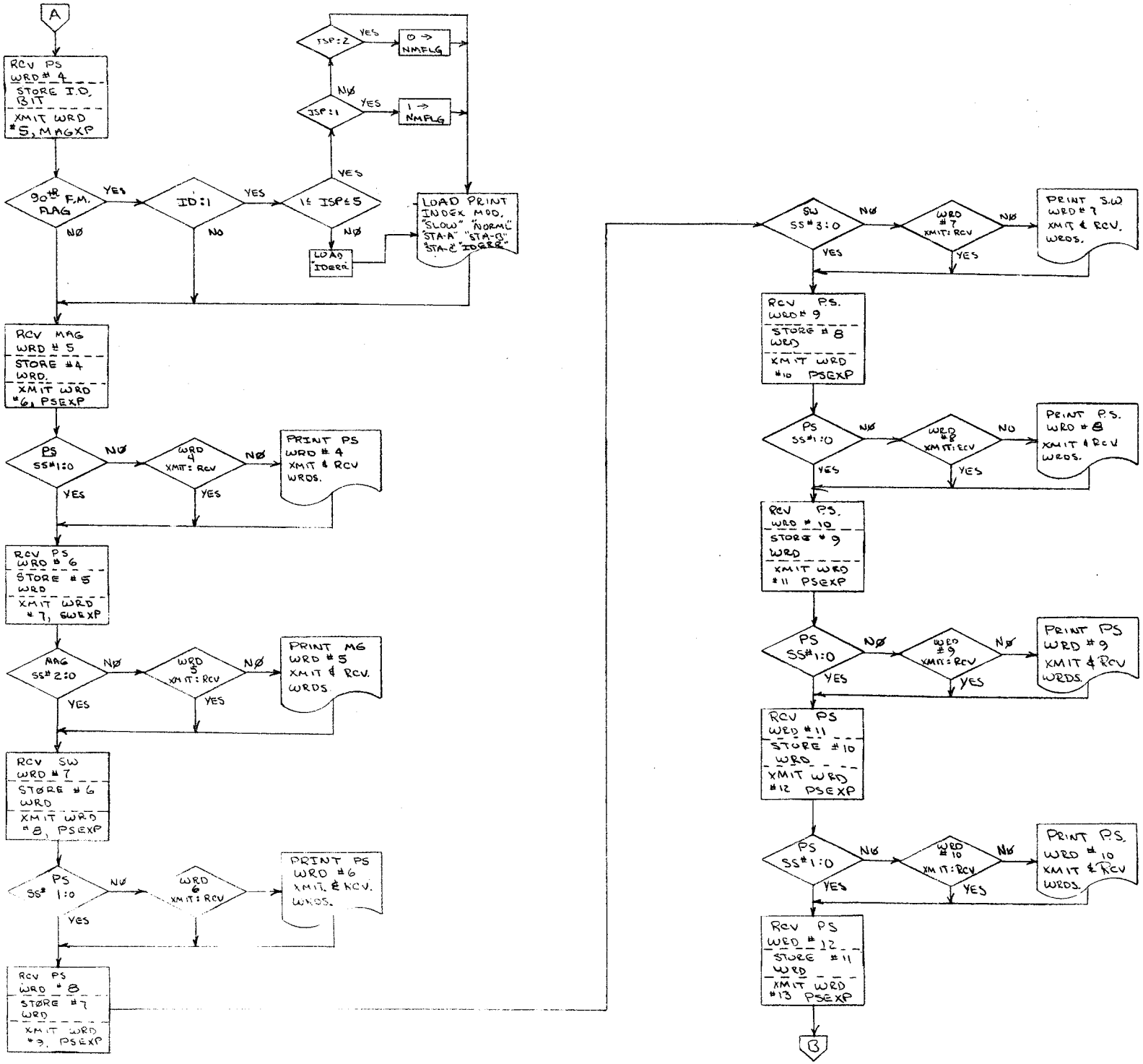
A
RCV PS WRD # 4
STORE I.D. BIT
XMIT WRD #5, MAGXP
90# F.M. FLAG
YES
NØ
ID:1
YES
NO
IF ISP≠5
YES
NØ
ISP:2
YES
0 → NMFLG
NØ
ISP:1
YES
1 → NMFLG
LOAD "IDERR"
LOAD PRINT INDEX MOD. "SLOW" "NORM" "STA-A" "STA-B" "STA-C" "IDERR"
RCV MAG WRD # 5
STORE #4 WRD.
XMIT WRD #6, PSEXP
PS SS#1:0
NØ
YES
WRD 4 XMIT: RCV
NØ
YES
PRINT PS WRD # 4 XMIT & RCV WRDS.
RCV PS WRD # 6
STORE #5 WRD
XMIT WRD #7, SWEXP
MAG SS# 2:0
NØ
YES
WRD 5 XMIT: RCV
NØ
YES
PRINT MG WRD # 5 XMIT & RCV. WRDS.
RCV SW WRD # 7
STORE # 6 WRD
XMIT WRD #8, PSEXP
PS SS# 1:0
NØ
YES
WRD 6 XMIT: RCV
PRINT PS WRD #6 XMIT. & RCV. WRDS.
RCV PS WRD # 8
STORE #7 WRD
XMIT WRD #9, PSEXP
SW SS# 3:0
NØ
YES
WRD # 7 XMIT: RCV
NØ
YES
PRINT S.W WRD # 7 XMIT & RCV. WRDS.
RCV P.S. WRD # 9
STORE # 8 WRD
XMIT WRD #10 PSEXP
PS SS#1:0
NØ
YES
WRD #8 XMIT: RCV
NO
YES
PRINT P.S. WRD # 8 XMIT & RCV WRDS.
RCV P.S. WRD # 10
STORE # 9 WRD
XMIT WRD #11 PSEXP
PS SS#1:0
NØ
YES
WRD #9 XMIT: RCV
NØ
YES
PRINT PS WRD # 9 XMIT & RCV WRDS.
RCV PS WRD #11
STORE #10 WRD
XMIT WRD #12 PSEXP
PS SS#1:0
NØ
YES
WRD #10 XMIT: RCV
NØ
YES
PRINT P.S. WRD # 10 XMIT & RCV WRDS.
Rcv PS WRD # 12
STORE #11 WRD
XMIT WRD #13 PSEXP
B

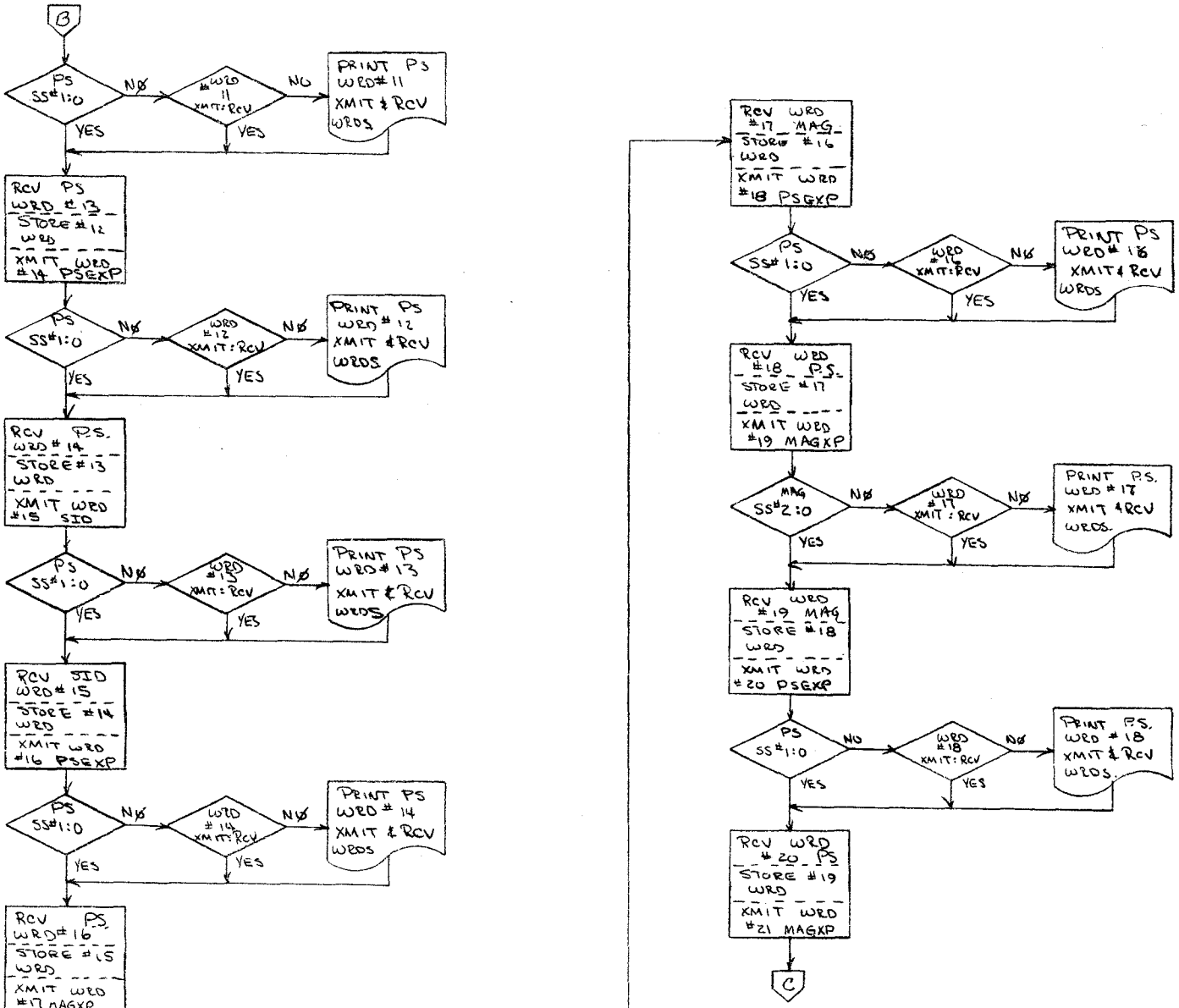
B
PS SS#1:0
NØ
WRD #11 XMIT:RCV
NO
YES
PRINT PS WRD#11 XMIT & RCV WRDS
RCV PS WRD #13 STORE #12 WRD XMIT WRD #14 PSEXP
PS SS#1:0
WRD #12 XMIT:RCV
PRINT PS WRD #12 XMIT & RCV WRDS
RCV P.S. WRD #14 STORE #13 WRD XMIT WRD #15 SID
PS SS#1:0
WRD #13 XMIT:RCV
PRINT PS WRD #13 XMIT & RCV WRDS
RCV SID WRD #15 STORE #14 WRD XMIT WRD #16 PSEXP
PS SS#1:0
WRD #14 XMIT:RCV
PRINT PS WRD #14 XMIT & RCV WRDS
RCV PS WRD #16 STORE #15 WRD XMIT WRD #17 MAGXP
SID SS#4:0
WRD #15 XMIT:RCV
PRINT SI WRD#15 XMIT & RCV WRDS
RCV WRD #17 MAG STORE #16 WRD XMIT WRD #18 PSEXP
PS SS#1:0
WRD #16 XMIT:RCV
PRINT PS WRD #16 XMIT & RCV WRDS
RCV WRD #18 P.S. STORE #17 WRD XMIT WRD #19 MAGXP
MAG SS#2:0
WRD #17 XMIT:RCV
PRINT P.S. WRD #17 XMIT & RCV WRDS.
RCV WRD #19 MAG STORE #18 WRD XMIT WRD #20 PSEXP
PS SS#1:0
WRD #18 XMIT:RCV
PRINT P.S. WRD #18 XMIT & RCV WRDS.
RCV WRD #20 PS STORE #19 WRD XMIT WRD #21 MAGXP
C

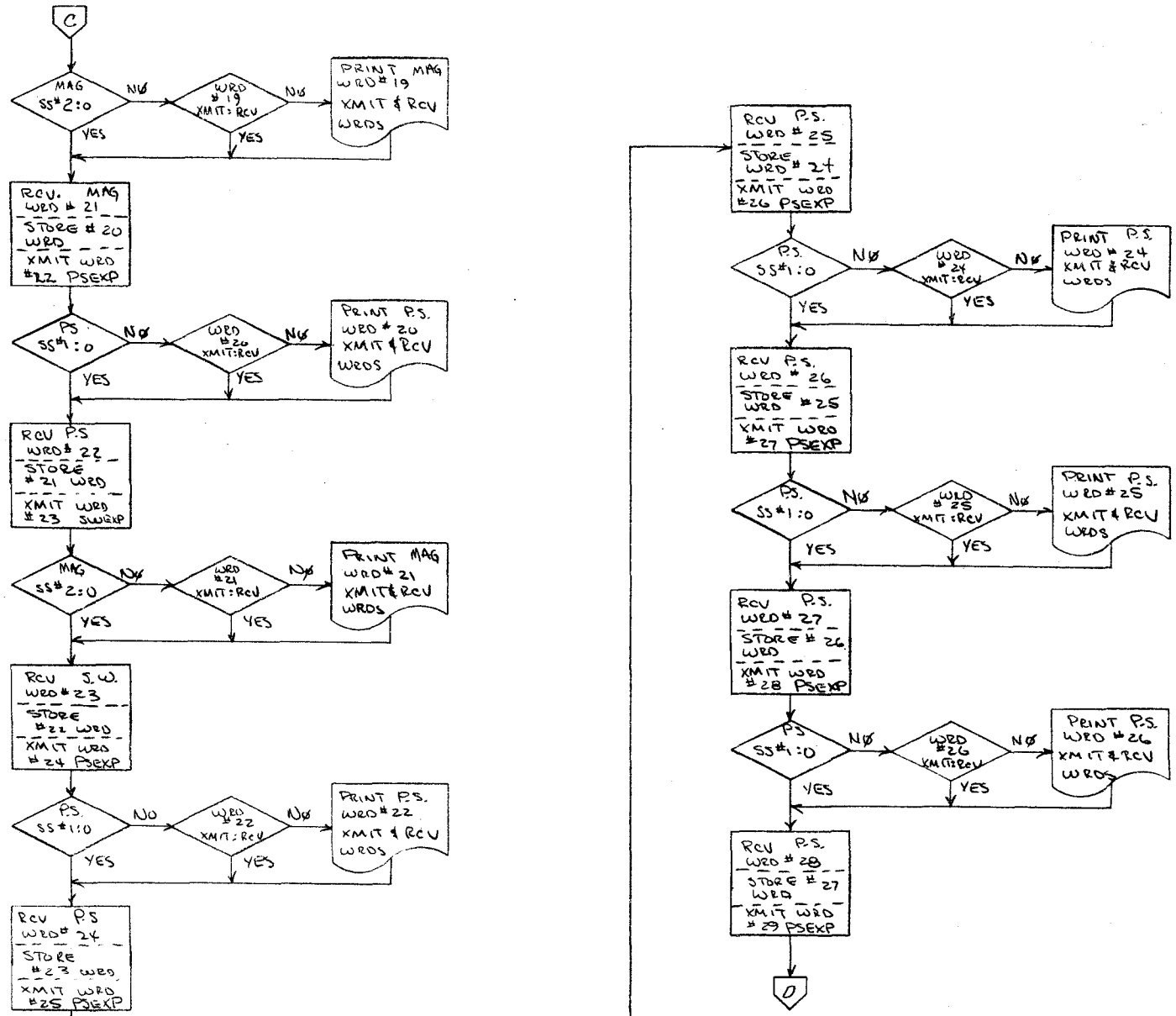
C
MAG SS#2:0
NØ
WRD #19 XMIT:RCV
NØ
PRINT MAG WRD#19 XMIT & RCV WRDS
YES
YES
RCV. MAG WRD # 21
STORE # 20 WRD
XMIT WRD #22 PSEXP
PS SS#1:0
NØ
WRD #20 XMIT:RCV
NØ
PRINT P.S. WRD # 20 XMIT & RCV WRDS
YES
YES
RCV P.S WRD# 22
STORE # 21 WRD
XMIT WRD #23 SWEXP
MAG SS#2:0
NØ
WRD #21 XMIT:RCV
NØ
PRINT MAG WRD#21 XMIT&RCV WRDS
YES
YES
RCV S.W. WRD#23
STORE #22 WRD
XMIT WRD #24 PSEXP
P.S. SS#1:0
NO
WRD #22 XMIT:RCV
NØ
PRINT P.S. WRD#22 XMIT & RCV WRDS
YES
YES
RCV P.S WRD# 24
STORE #23 WRD
XMIT WRD #25 PSEXP
SW SS#3:0
NO
WRD #23 XMIT:RCV
NO
PRINT SW WRD # 23 XMIT & RCV WRDS
YES
YES
RCV P.S. WRD # 25
STORE WRD # 24
XMIT WRD #26 PSEXP
P.S. SS#1:0
NØ
WRD # 24 XMIT:RCV
NØ
PRINT P.S. WRD # 24 XMIT & RCV WRDS
YES
YES
RCV P.S. WRD # 26
STORE WRD # 25
XMIT WRD #27 PSEXP
P.S. SS#1:0
NØ
WRD # 25 XMIT:RCV
NØ
PRINT P.S. WRD # 25 XMIT & RCV WRDS
YES
YES
RCV P.S. WRD # 27
STORE # 26 WRD
XMIT WRD #28 PSEXP
P.S SS#1:0
NØ
WRD #26 XMIT:RCV
NØ
PRINT P.S. WRD # 26 XMIT & RCV WRDS
YES
YES
RCV P.S. WRD # 28
STORE # 27 WRD
XMIT WRD #29 PSEXP
D

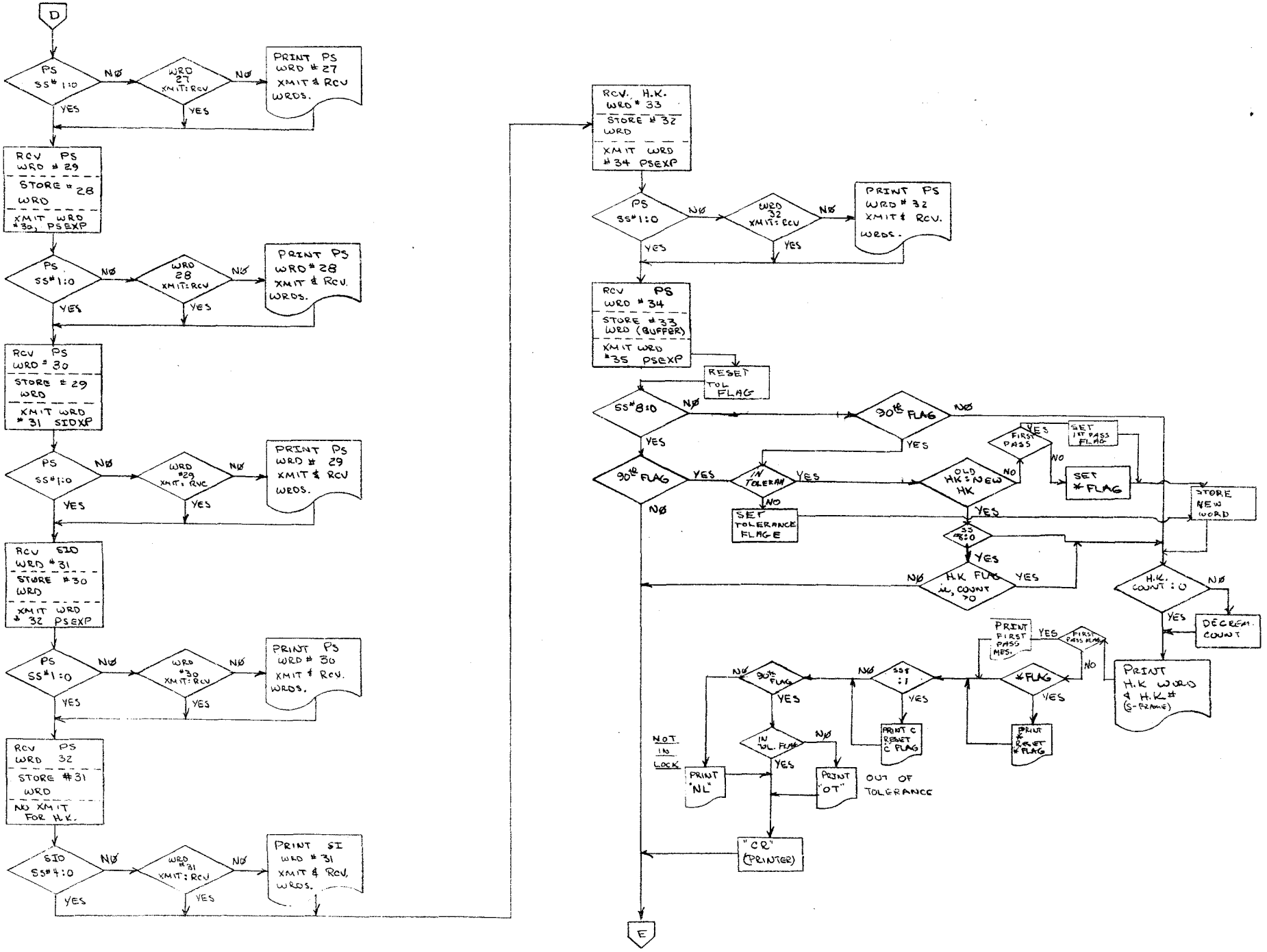
D
PS SS#1:0
NØ
WRD 27 XMIT: RCV
PRINT PS WRD #27 XMIT & RCV WRDS.
YES
RCV PS WRD #29
STORE #28 WRD
XMIT WRD #30, PSEXP
PS SS#1:0
WRD 28 XMIT: RCV
PRINT PS WRD #28 XMIT & RCV. WRDS.
RCV PS WRD #30
STORE #29 WRD
XMIT WRD #31 SIDXP
PS SS#1:0
WRD #29 XMIT: RVC
PRINT PS WRD # 29 XMIT & RCV WRDS.
RCV SID WRD #31
STORE #30 WRD
XMIT WRD # 32 PSEXP
PS SS#1:0
WRD #30 XMIT: RCV
PRINT PS WRD # 30 XMIT & RCV. WRDS.
RCV PS WRD 32
STORE #31 WRD
NO XMIT FOR H.K.
SID SS#4:0
WRD #31 XMIT: RCV
PRINT SI WRD #31 XMIT & RCV. WRDS.
RCV. H.K. WRD # 33
STORE # 32 WRD
XMIT WRD #34 PSEXP
PS SS#1:0
WRD 32 XMIT: RCV
PRINT PS WRD # 32 XMIT & RCV. WRDS.
RCV PS WRD # 34
STORE #33 WRD (BUFFER)
XMIT WRD #35 PSEXP
RESET TOL FLAG
SS#8:0
90th FLAG
IN TOLERAN
SET TOLERANCE FLAGE
OLD HK: NEW HK
FIRST PASS
SET 1ST PASS FLAG
SET *FLAG
STORE NEW WORD
SS #8:0
H.K FLAG ie, COUNT >0
H.K. COUNT : 0
DECREM. COUNT
PRINT H.K WORD & H.K.# (S-FRAME)
PRINT FIRST PASS MES.
FIRST PASS FLAG
*FLAG
PRINT * RESET *FLAG
SS# :1
PRINT C RESET C FLAG
90th FLAG
IN TOL. FLAG
NOT IN LOCK
PRINT "NL"
PRINT "OT"
OUT OF TOLERANCE
"CR" (PRINTER)
E

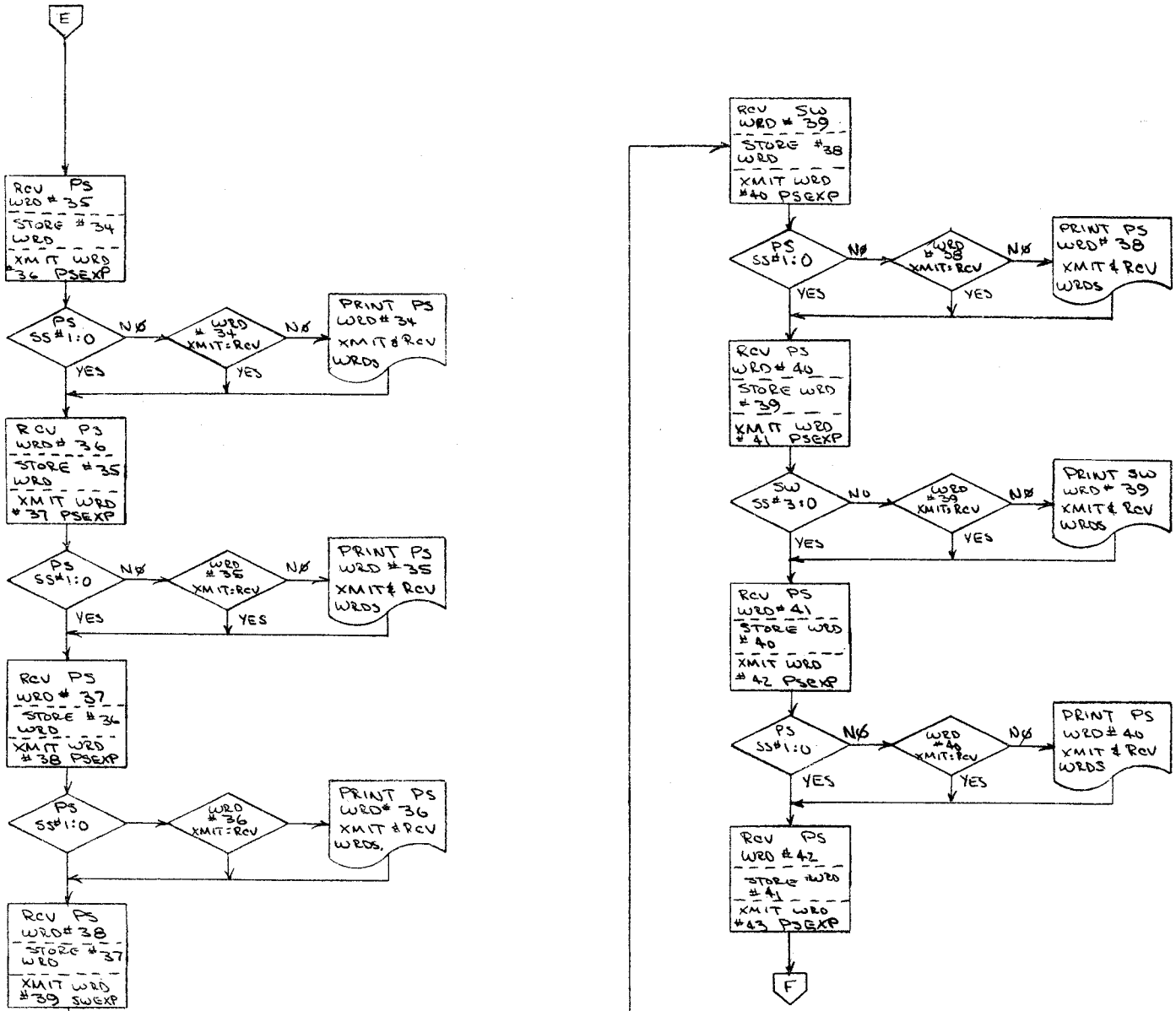
E
RCV PS WRD # 35
STORE # 34 WRD
XMIT WRD # 36 PSEXP
PS SS#1:0
NØ
WRD # 34 XMIT:RCV
NØ
PRINT PS WRD # 34 XMIT & RCV WRDS
YES
YES
RCV PS WRD # 36
STORE # 35 WRD
XMIT WRD # 37 PSEXP
PS SS#1:0
NØ
WRD # 35 XMIT:RCV
NØ
PRINT PS WRD # 35 XMIT & RCV WRDS
YES
YES
RCV PS WRD # 37
STORE # 36 WRD
XMIT WRD # 38 PSEXP
PS SS#1:0
WRD # 36 XMIT:RCV
PRINT PS WRD # 36 XMIT & RCV WRDS.
RCV PS WRD # 38
STORE # 37 WRD
XMIT WRD # 39 SWEXP
PS SS#1:0
NØ
WRD # 37 XMIT:RCV
NØ
PRINT PS WRD # 37 XMIT & RCV WRDS.
YES
YES
RCV SW WRD # 39
STORE # 38 WRD
XMIT WRD # 40 PSEXP
PS SS#1:0
NØ
WRD # 38 XMIT:RCV
NØ
PRINT PS WRD # 38 XMIT & RCV WRDS
YES
YES
RCV PS WRD # 40
STORE WRD # 39
XMIT WRD # 41 PSEXP
SW SS#3:0
NO
WRD # 39 XMIT:RCV
NØ
PRINT SW WRD # 39 XMIT & RCV WRDS
YES
YES
RCV PS WRD # 41
STORE WRD # 40
XMIT WRD # 42 PSEXP
PS SS#1:0
NØ
WRD # 40 XMIT:RCV
NØ
PRINT PS WRD # 40 XMIT & RCV WRDS
YES
YES
RCV PS WRD # 42
STORE WRD # 41
XMIT WRD # 43 PSEXP
F

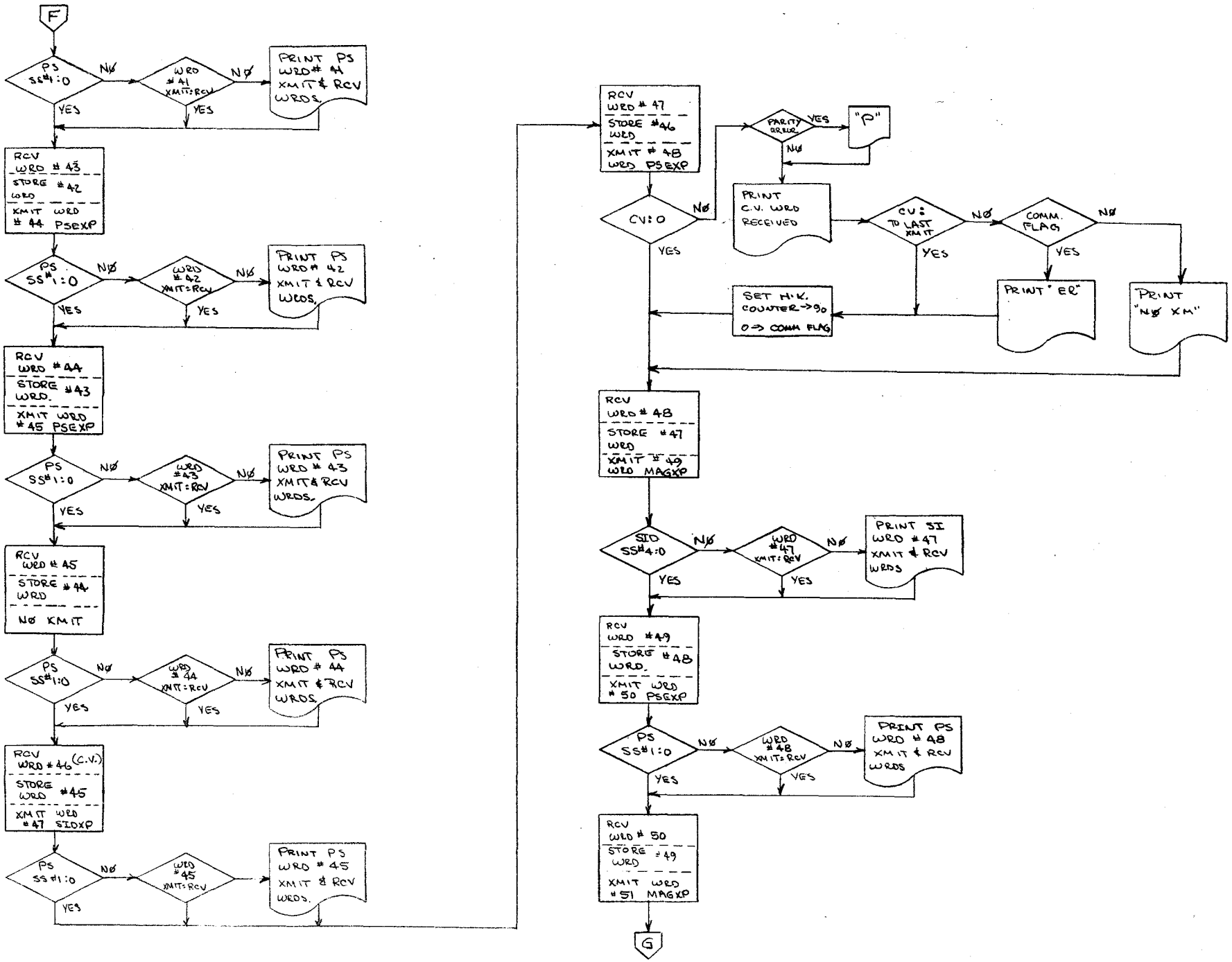
F
PS SS#1:0
NØ
WRD #41 XMIT:RCV
NØ
PRINT PS WRD# 41 XMIT & RCV WRDS.
YES
YES
RCV WRD # 43
STORE #42 WRD
XMIT WRD #44 PSEXP
PS SS#1:0
NØ
WRD #42 XMIT:RCV
NØ
PRINT PS WRD# 42 XMIT & RCV WRDS.
YES
YES
RCV WRD #44
STORE #43 WRD.
XMIT WRD #45 PSEXP
PS SS#1:0
NØ
WRD #43 XMIT:RCV
NØ
PRINT PS WRD # 43 XMIT & RCV WRDS.
YES
YES
RCV WRD # 45
STORE #44 WRD
NØ XMIT
PS SS#1:0
NØ
WRD #44 XMIT:RCV
NØ
PRINT PS WRD # 44 XMIT & RCV WRDS.
YES
YES
RCV WRD #46 (C.V.)
STORE WRD #45
XMIT WRD #47 SIDXP
PS SS#1:0
NØ
WRD #45 XMIT:RCV
PRINT PS WRD # 45 XMIT & RCV WRDS.
YES
RCV WRD # 47
STORE #46 WRD
XMIT # 48 WRD PSEXP
PARITY ERROR
YES
"P"
NØ
CV:0
NØ
PRINT C.V. WRD RECEIVED
CV: TO LAST XMIT
NØ
COMM. FLAG
NØ
YES
YES
YES
SET H.K. COUNTER->90 0-> COMM FLAG
PRINT "ER"
PRINT "NØ XM"
RCV WRD # 48
STORE #47 WRD
XMIT # 49 WRD MAGXP
SID SS#4:0
NØ
WRD #47 XMIT:RCV
NØ
PRINT SI WRD #47 XMIT & RCV WRDS
YES
YES
RCV WRD #49
STORE #48 WRD.
XMIT WRD #50 PSEXP
PS SS#1:0
NØ
WRD #48 XMIT:RCV
NØ
PRINT PS WRD # 48 XMIT & RCV WRDS
YES
YES
RCV WRD # 50
STORE #49 WRD
XMIT WRD #51 MAGXP
G

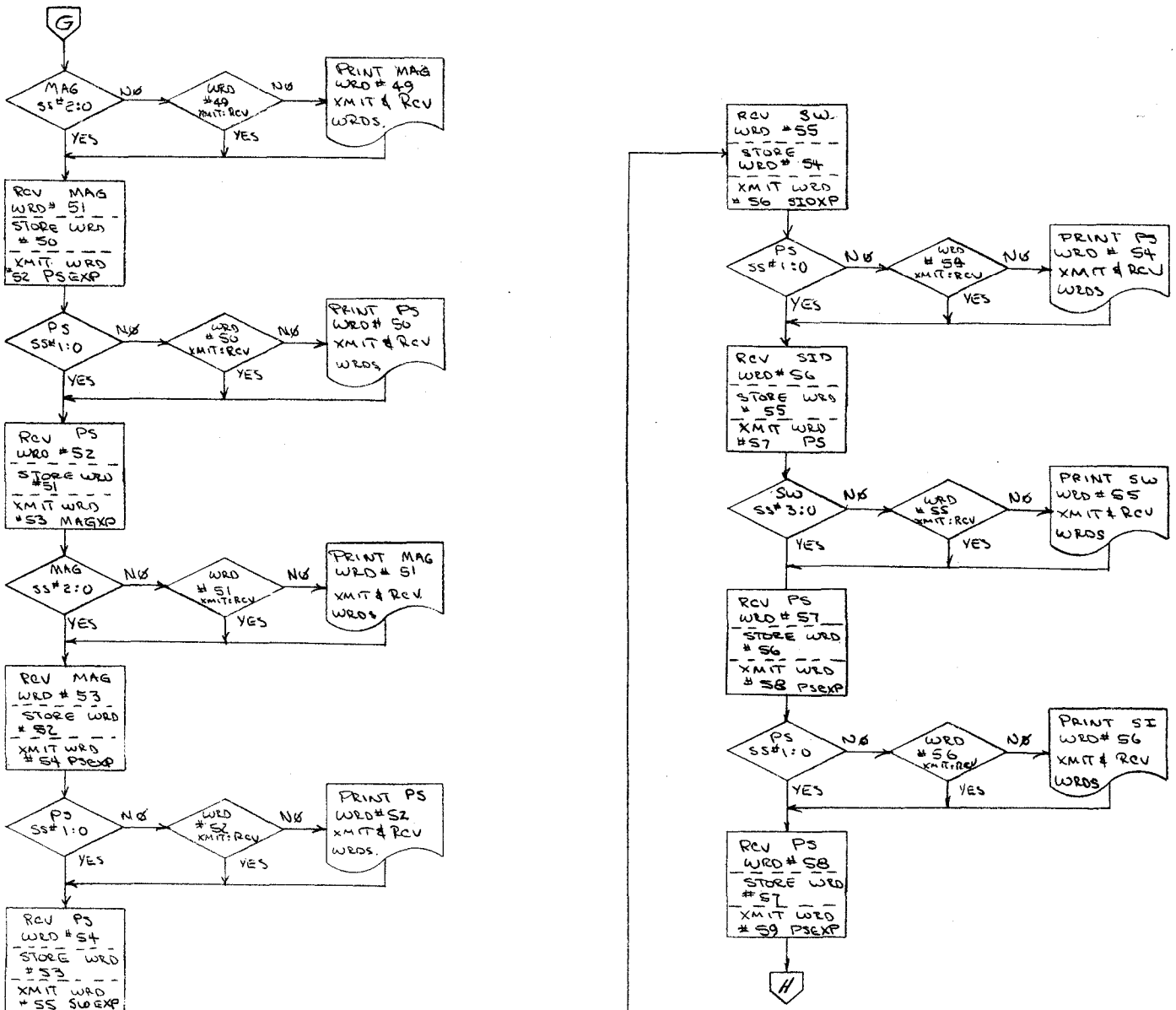
G
MAG SS#2:0
NO
WRD #49 XMIT:RCV
NO
PRINT MAG WRD # 49 XMIT & RCV WRDS.
YES
YES
RCV MAG WRD # 51 STORE WRD # 50 XMIT WRD #52 PSEXP
PS SS#1:0
NO
WRD # 50 XMIT:RCV
NO
PRINT PS WRD# 50 XMIT & RCV WRDS
YES
YES
RCV PS WRD #52 STORE WRD #51 XMIT WRD #53 MAGXP
MAG SS#2:0
NO
WRD # 51 XMIT:RCV
NO
PRINT MAG WRD # 51 XMIT & RCV WRDS
YES
YES
RCV MAG WRD # 53 STORE WRD # 52 XMIT WRD # 54 PSEXP
PS SS#1:0
NO
WRD # 52 XMIT:RCV
NO
PRINT PS WRD#52 XMIT & RCV WRDS.
YES
YES
RCV PS WRD # 54 STORE WRD # 53 XMIT WRD # 55 SWEXP
MAG SS#2:0
NO
WRD # 53 XMIT & RCV
NO
PRINT MAG WRD # 53 XMIT & RCV WRDS
YES
YES
RCV SW WRD # 55 STORE WRD# 54 XMIT WRD # 56 SIOXP
PS SS#1:0
NO
WRD # 54 XMIT:RCV
NO
PRINT PS WRD # 54 XMIT & RCV WRDS
YES
YES
RCV SID WRD# 56 STORE WRD # 55 XMIT WRD #57 PS
SW SS#3:0
NO
WRD # 55 XMIT:RCV
NO
PRINT SW WRD # 55 XMIT & RCV WRDS
YES
YES
RCV PS WRD # 57 STORE WRD # 56 XMIT WRD # 58 PSEXP
PS SS#1:0
NO
WRD # 56 XMIT:RCV
NO
PRINT SI WRD# 56 XMIT & RCV WRDS
YES
YES
RCV PS WRD # 58 STORE WRD #57 XMIT WRD # 59 PSEXP
H

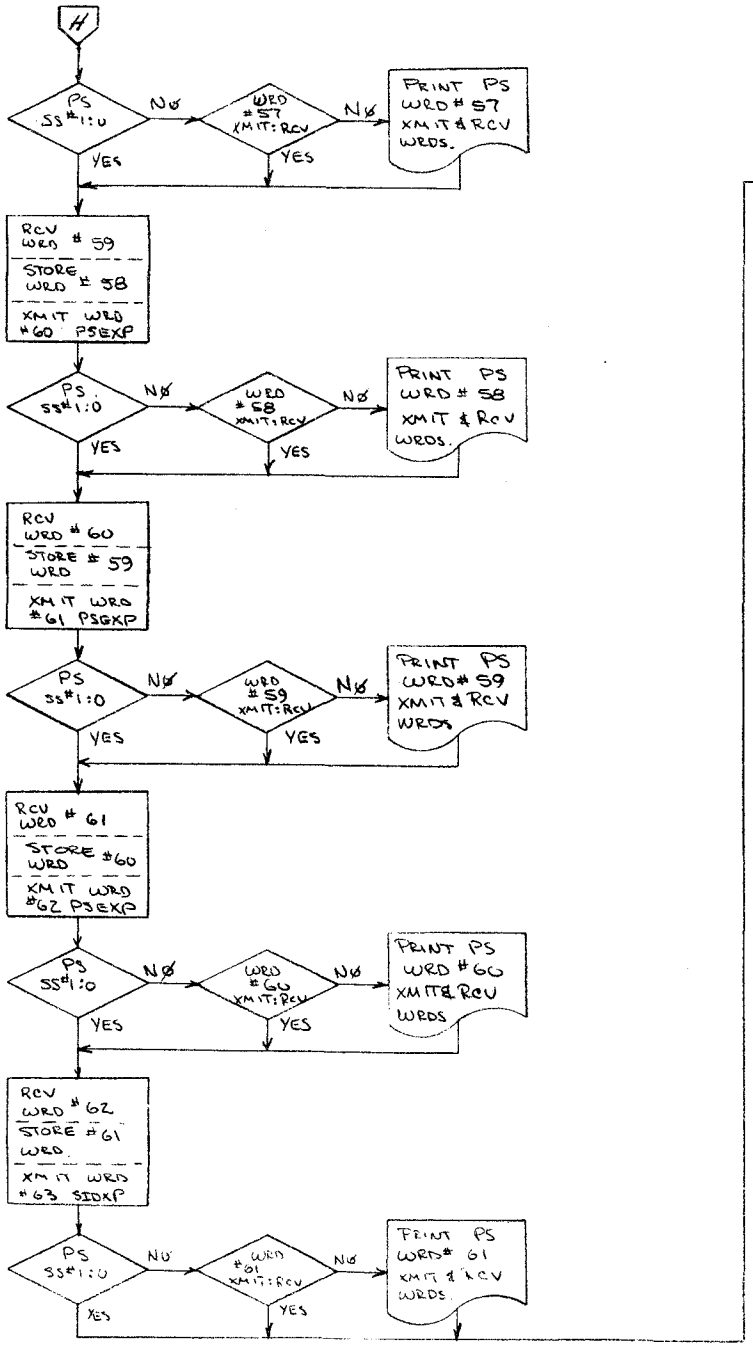

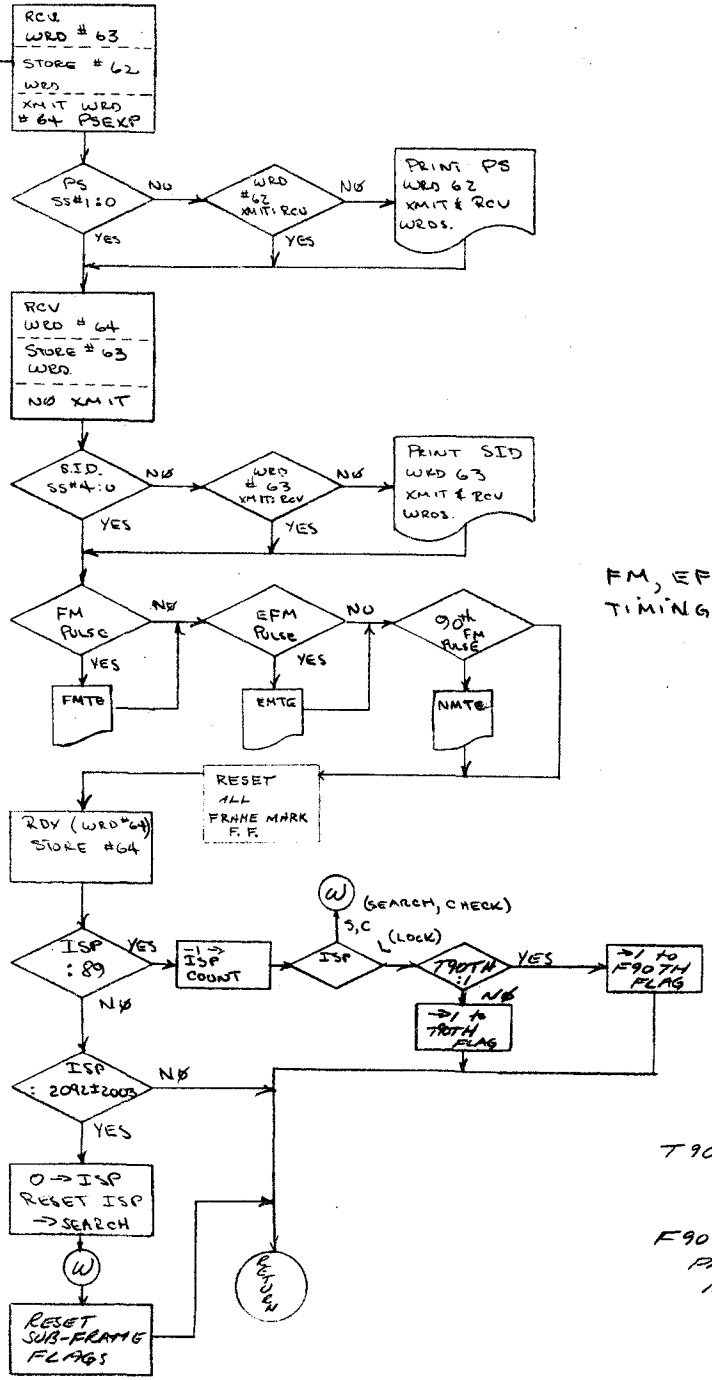

FM, EFM, 90TH FM TIMING TESTS

T90TH FLAG (FIRST PASS OF SUB FRAME IN LOCK)

F90TH FLAG (SECOND PASS OF SUB FRAME IN LOCK)