APPLICATION OF CONTROLLED EXPLOSIVE LOADING FIXTURES TO THE STUDY OF SHOCK-INDUCED COLOR CHANGE IN NONTRONITE, M. B. Boslough, R. A. Graham, Shock Wave and Explosives Physics Division 1131, Sandia National Laboratories, Albuquerque, New Mexico 87185.

Explosive loading experiments have been carried out on the smectite clay, nontronite ($(1/2\ Ca, Na)_{0.7}Fe_4(Si_{7.3},Al_{0.7})O_{20}(OH)_4 \cdot nH_2O$). This mineral has been proposed as a major component of the Martian fines (1), due to its similarity to the chemistry of the Martian surface material as determined by the x-ray fluorescence spectroscopy experiment on the Viking landers (2). The samples were collected near Riverside, California by the Viking x-ray fluorescence team, and is the same material studied in previous shock (3-5) and heating (6,7) experiments.

Weldon et al. (3,5) found that when nontronite is shocked to sufficiently high pressures (and shock-induced temperatures) the color of the recovered material becomes redder and darker than the olive-yellow starting material, spanning the color range found in the fine material seen on the Martian surface. They proposed a mechanism by which repeated impacts onto the surface of Mars shock modified the regolith, giving it its present color. Subsequent heating experiments by Moskowitz and Hargraves (6,7), support this proposal. Thermal treatment of nontronite reddens the color and greatly increases the magnetic susceptibility and saturation magnetization, yielding a material similar to the Martian fines in both chemical and physical properties.

Numerous questions have remained regarding the effects of shock compression, due to both the paucity of data and method of experimentation. Recent work of Graham and Webb (8) has demonstrated the necessity for careful computer modeling of shock-recovery experiments, if the loaded state is to be well characterized. Simple one-dimensional impedance-match calculations, as were used to determine peak pressures in the previous shock experiments, can be low by as much as a factor of three, due to their neglect of the radial loading waves. The present experiments were carried out in fixtures which have been subjected to extensive two-dimensional numerical simulations. The fixture (Fig. 1) consists of a copper capsule with a 5 cm^3 cylindrical cavity which is filled with the powder specimen. The capsule is surrounded by a steel block and is shock loaded by a pulse generated by an explosive pad and shaped by a steel driver plate. The radial nature of the loading is illustrated in Fig. 2. Shock-induced temperatures are controlled by various starting powder compact densities.

Three experiments have been carried out thus far, to peak pressures of 7.5, 16 and 22 GPa on powder compacts whose densities were 1.65 to 1.70 Mg/m^3. Strong color change in the material was observed only in the 16 GPa shot, in a thin, annular region at the edge of the sample. This region corresponds to the highest temperature zone as determined by the numerical calculations. The unshocked nontronite was light olive-brown, described by 2.5Y 5/4 on the Munsell soil color chart (9). This is slightly darker than the olive-yellow (2.5Y 6/6) described in the previous study, presumably due to slightly different sample preparation methods. The shocked material from the "red ring" in the 16 GPa shot was strong brown (7.5 YR 5/6), the same color as the material from the high pressure shot of the previous study. The reasons for a color change in the 16 GPa shot, but not in the 22 GPa shot are unknown; however, the capsule vented a small amount of material in the latter shot, presumably due to an overpressure from steam generated when the water in the nontronite shock-vaporized (4). This suggests that the color change depends not only on

© Lunar and Planetary Institute • Provided by the NASA Astrophysics Data System

pressure and temperature, but on the type of atmosphere present, an observation already made in heating experiments (5). The presence of the "red ring" negates two of the possible problems associated with the previous shock-recovery experiments: the possibility that the color change was due to post-shock heating by the container material, and the possibility of chemical reactions with the steel container. The first problem did not occur because much of the altered material was not in contact with the container. The second did not occur because copper, not steel, containers were used in the present study.

Acknowledgments: We thank A. Baird for providing nontronite samples, R. Weldon for discussions and L. McFadden for sample preparation assistance.

References: (1) Toulmin, P., Baird, A.K., Clark, B.C., Keil, K., Rose, H.J., Evans, P.H., and Kelliher, W.C. (1977) J. Geophys. Res., 82, 4625-4634. (2) Clark, B.C., Baird, A.K., Rose, H.J., Toulmin, P., Cristian, R.P., Kelliher, W.C., Castro, A.J., Rowe, C.D., Keil, K., and Huss, G.R., (1977) J. Geophys. Res., 82, 4577-4594. (3) Weldon, R.J., Boslough, M.B., and Ahrens, T.J. (1980) Lunar Planet. Sci. XI, 1234-1235. (4) Boslough, M.B., Weldon, R.J., and Ahrens, T.J. (1980) Proc. Lunar Planet Sci. 11th, 2145-2158. (5) Weldon, R.J., Thomas, W.M., Boslough, M.B., and Ahrens, T.J. (1982) J. Geophys. Res., 87, 10,102-10,114. (6) Moskowitz, B.M., and Hargraves, R.B. (1982) J. Geophys. Res., 87, 10,115-10,128. (7) Moskowitz, B.M., and Hargraves, R.B. (1984) Science, 225, 1152-1154. (8) Graham, R.A. and Webb, D.M. (1984) in Shock Waves in Condensed Matter - 1983, 211-214. (9) Munsell Soil Color Charts, 1975, Munsell Color, Macbeth Division of Kollmargen Corp., Baltimore, Maryland.

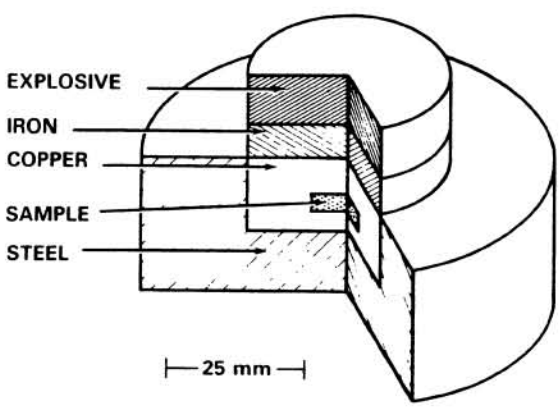

Figure 1. General configuration of controlled explosive loading fixtures. The explosive pad is detonated with a plane wave generator, and the geometry appears to be one dimensional; however, the loading becomes radial due to the high shock velocity in the copper.

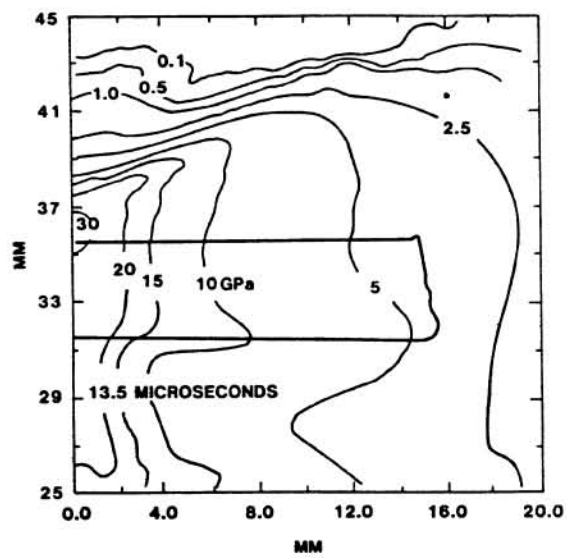

Figure 2. Results of numerical simulation, showing constant-pressure contours at a time 13.5 microseconds after explosive detonation. The contours are close to vertical within the sample cavity, indicating that the initially planar loading has evolved to a radial loading pattern (abscissa defines distance from axis of fixture, and ordinate is distance along axis).

© Lunar and Planetary Institute • Provided by the NASA Astrophysics Data System