Capillary Fluids Design for an Expeirment for Next-Gen Suborbital Flight.

S. H. Collicott[1] and L. Sharp[1], [1]Purdue University, School of Aeronautics and Astronautics, 701 W. Stadium Ave., West Lafayette, IN 47907-2045, collicott@purdue.edu.

Introduction: The emerging "Next-Gen" commercial sub-orbital rocket industry is creating new science facilities in addition to the well-publicized tourism opportunities. These several-minute long durations of a quality low-gravity test environment permit capillary fluids experimentation far cheaper and quicker than before. A combination of support from the National Science Foundation, Purdue's College of Engineering, and Purdue's School of Aeronautics and Astronautics has been secured to enable rapid delivery of an original capillary fluids experiment. This will be for automated operation on a commercial suborbital flight.

Experiment Goals: This experiment tests critical wetting predictions from numerical modeling in three-dimensional containers. In other words, the numerical modeling is being performed in conditions for which the critical wetting lacks the solid mathematical foundation of cylindrical containers. Thus the experiment is necessary to permit application of the numerical model to fuel cell water management, pulmonary health, MEMS-based medical and other instrumentation, and spaceflight life support, thermal control, and liquid propulsion systems. "Critical wetting" is the property of a two-fluid system in which the relative wettability of the solid container, described by the contact angle of the liquid on the solid, and the shape of the container determine whether the liquid will form a finite-height single-valued interface near one end of the container[1]. If not, the liquid advances by imbibition, often even against gravity, up one corner of the container to a topologically different equilibrium distribution. The importance of the phenomenon can be seen in the dangers of system failure from liquid in the "wrong" place when the phenomenon is ignored or not fully understood. Fuel cell gas-transport passages can be blocked[2], wicking of liquids in MEMS devices can differ from the desired wicking, condensers in miniature heat-transfer loops can clog, and similar, all from insufficient understanding of the critical wetting phenomenon in 3-D geometries. This Purdue 3-D gap-type critical wetting experiment is this first to explore the phenomenon and to test specific hypotheses formed from extending the numerical modeling from the proven 2-D cases into 3-D.

Experiment Design: The test cell is a spherical container with a pair of adjustable thin vanes, see Figure 1. Here thin means that the differing thicknesses of the two vanes are both much less than the radius of the sphere. Adjustable means that the position of the vane relative to the spherical wall is adjustable during the low-gravity test time. The vanes will begin at the position that creates the largest gap between vane and wall, large enough to prevent any critical wetting. Adjusting the vanes will narrow the gap, creating critical wetting conditions. As the two vanes differ substantially in thickness, the two sides of the container will reach critical conditions at different vane settings. This geometry will show changes in liquid positioning, from approximately the bottom of the sphere to the top, in the weightless test time. Such an investigation can not be performed in 1-g. Weightlessness is required for this experiment so that the critical wetting physics to be observed clearly and unambiguously.

Operation of the fluids vessel in the experiment throughout the mission is sketch in Figure 2. Injection of the test liquid is the first mechanical actuation required and then vane actuation follows. Injection will be as rapid as possible without permitting geyser formation. This can be done through keeping Weber number of the emerging flow under approximately 1.3 or with one or more deflection plates above the entrance[3]. The operations of the injection hardware can be tested in 1g, upside down (-1g), and various sideways or random orientations prior to flight.

Not detailed in the sketches are both non-wetting coatings and unique vane notches to destroy all chance of critical wetting near the upper ends of the vanes.

Numerical Modeling: *Surface Evolver* has been validated against cylindrical critical wetting and against classical capillary instability analyses[4]. No other computer model has such fidelity in contact angle effects. CFD packages such as Flow3-D, Fluent, and the newer OpenFOAM show promise and indeed improve with each generation of computing memory and power, but are fundamentally dynamics codes and are thus intrinsically ill-suited for capillary fluid statics problems such as existence of an assumed free surface topology or linear stability of an equilibrium free surface.

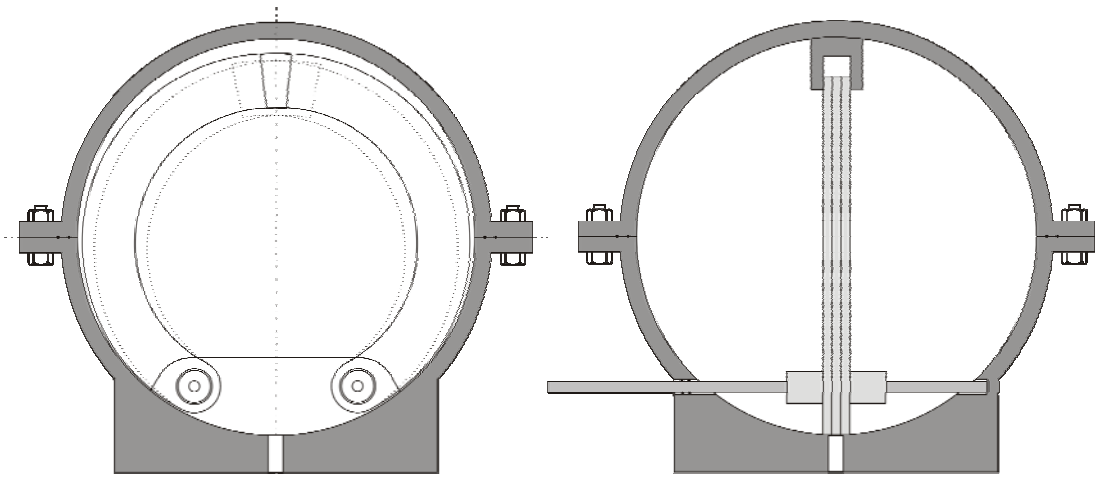

Figure 1. Notional sketches of two views of proposed experiment test cell. The vanes differ in thickness and thus the two non-dimensional gap sizes (gap/thickness) differ for equivalent vane angles. Dashed vane outline shows a large-gap setting.

Acknowledgements: Support from the National Science Foundation Fluid Dynamics program is appreciated. The School of Aeornautics and Astronautics and the College of Engineering at Purdue Univeristy have partnered to support the research.

References:

[1] Finn, R., "Capillary Surface Interfaces," *Notices of the AMS*, 46, No. 7, pp. 770-781, Aug., 1999.

[2] Allen, J.S., Son, S.Y., Collicott, S.H., "Proton exchange membrane fuel cell (PEMFC) flow-field design for improved water management", *Hdbk of Fuel Cell:*, V5&6, Vielstich, W., Gasteiger, H.A., Yokokawa, H.(ed.). J Wiley & Sons, UK, pp687-698, 2009.

[3] Collicott, S. H., Weislogel, M. M., "Computing Existence and Stability of Capillary Surfaces using Surface Evolver," *AIAA J*, 42, pp. 289-295, Feb 2004.

[4]. Symons, E. P., Nussle, R. C., Abdalla, K. L., "Liquid Inflow to Initially Empty, Hemispherical Ended Cylinders During Weightlessness", NASA, TN-M628, 1968.

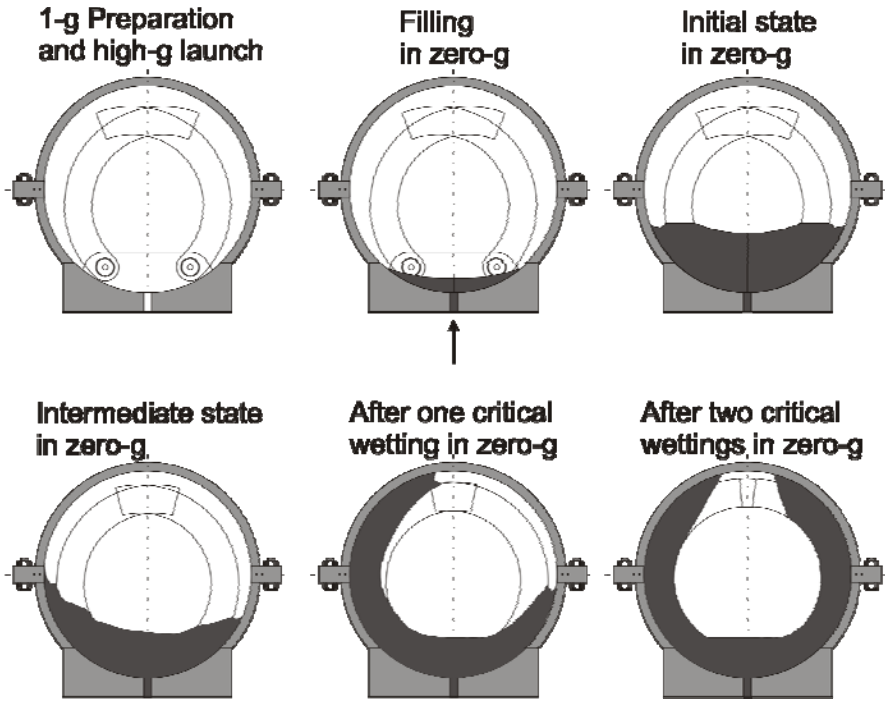

Figure 2. Sketch of operation plan for 3-minutes of zero-gravity. Note the symmetric changes in vane angles that reduce gap sizes. Draining is not required prior to the end of the mission. Vane actuation and stiffening hardware are not shown.