National Aeronautics and Space Administration

RADIOISOTOPE POWER SYSTEMS

& PLANETARY TECHNOLOGIES

Leonard Dudzinski
RPS Program Executive

Program Status

VEXAG Meeting

November 19, 2013

POWER TO EXPLORE

Overview

- RPS, Plutonium, and the ASRG Decision
- In-Space Propulsion Technologies
- Broader Planetary Science Technologies
- Science community engagement towards future planetary science technology investment

Advanced Stirling Radioisotope Generator (ASRG)

- ASRG provides increased efficiency (4X current)
- Offered as GFE in Discovery 12
- Highly enabling for science missions
- Conducted Final Design Review in July 2012
- Engineering units in test
- Controller design modified to be more robust to radiation environment
- Qualification unit (QU) build in progress

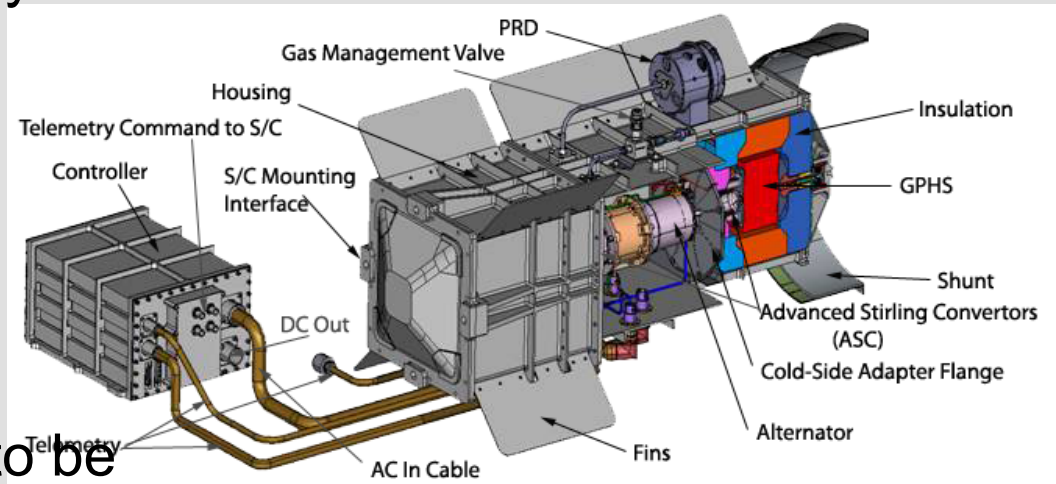

Status of Stirling Technology

- NASA and DOE will terminate work on Advanced Stirling Radioisotope Generator (ASRG) flight system development
- Non-nuclear hardware being transferred to NASA Glenn Research Center
- Work on technology development and further maturation for flight-ready systems will continue
- Actively considering options for higher-power Stirling systems (500W-1KW)

Why Cancel the ASRG?

- Continuing tight fiscal environment has severely constrained the NASA planetary science budget
  - ASRG experienced significant cost growth since FY 2009
- Several near-term missions that could have used the ASRG have been delayed or deferred
  - Clear need to balance the promising potential of ASRG vs. the potential loss of other mission opportunities

Looking Ahead

- Multi-Mission Radioisotope Thermoelectric Generator (MMRTG) -- working well on Mars -- will be available option for future missions
- Availability of Radioisotope Heater Units (RHUs) also being sustained
- Current U.S. plutonium-238 supply could support Mars 2020 and a Europa mission
- Re-start of Pu-238 production going smoothly, building toward goal of ~ 1kg of isotope/yr

- *It is understood by the program that Stirling technology is critical for operations in the Venusian environment*

Pu-238 Domestic Production Status

- NASA Authorization Act of 2010 authorized NASA to fund DOE efforts in Pu-238 Production under a reimbursable agreement.
- DOE has begun a multi-phase Plutonium-238 Supply Project consistent with the published Start-up Plan to achieve full-scale production late in the decade.
- Phase I efforts to be completed by in 2013.
  - Project planning, NEPA assessment, analysis of project alternatives, cost and schedule estimate for scale-up to full-scale production (average 1 kg isotope/yr)

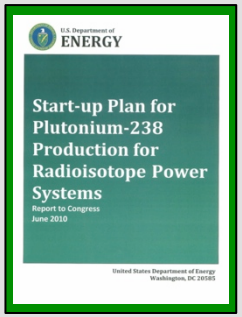

- Technology demonstration efforts will achieve by the end of 2015:
  - A qualified neptunium-237 target for irradiation in the High Flux Isotope Reactor
  - A qualified process for post-irradiation target processing
  - A qualified Pu-238 product
- PPBE FY15 plan is transfer full funding to NASA
  - PSP plan adjusted to funding limitations in FY13 and FY14 due to Planetary Science Budget
  - Additionally in FY15, NASA expects to begin to fund DOE to maintain the base RPS infrastructure & capabilities

Update from Pu-238 2010 Plan

- The initial cost range of the project is $85M to $125M.
  - This upper bound is higher than in previous reports due to incorporation of knowledge gained during this proof-of-concept stage and the addition of appropriate cost and schedule reserves to the plan.
- The project expects to establish a formal baseline and approval to proceed to project implementation in early fiscal 2016.
- If fully funded, the production capability will be fully operational by Spring 2021
  - The expected full-scale production date has slipped due to budget constraints

- NASA is pleased with the progress made by the Department of Energy toward a restart of a U.S. production capability for Pu-238.
- Pu-238 remains critical to the needs of NASA robotic space exploration, and the Pu-238 Supply Project in on-track to fulfill this need as we end this decade.

Radioisotope Power System Applications in Near Term Planetary Missions

Evolving SMD RPS Mission Planning Set post Decadal Survey

Large Directed / New Frontiers / Discovery / Mars / Lunar / Other	Projected Launch Year	Power Reqmnt (W_e)	RPS Type (Flight + Spare)	Pu-238 Availability
Mars Science Lab *Operational*	*2011*	100	1 MMRTG	
Juno (New Frontiers 2) *On its way*	*2011*	No RPS Requirement		
Discovery 12 ***Not Selected***	*2016 - 17*	*200 - 300*	*2 ASRG*	
Osiris-REX (NF3) ***In Development***	2016	**Directed non-RPS**		
Solar Probe ***In Development***	2019	**Directed non-RPS**		
Discovery 13	2019 - 23	200 - 300	2 MMRTG	
MSM (Mars 2020) ***In Planning***	2020	100 - 150	1 MMRTG + Spare	
Europa or Uranus or Other†	2024+	400 -500	4-5 MMRTG + Spare	
New Frontiers 4	TBD	300 - 500	TBD + Spare	
Discovery 14	TBD	200 - 300	TBD	
New Frontiers 5	TBD	300 - 500	TBD + Spare	

- 6 year-cadence New Frontier mission opportunities would likely require 500 W_e RPS
- Every Discovery mission opportunity is proposed to offer an RPS option
- Radioisotope heater units may be required on these and other missions
- Other science, exploration, and demo missions not yet identified may also require RPS

† *If funded*

Plutonium Supply vs Current Planetary Requirements MMRTG Only

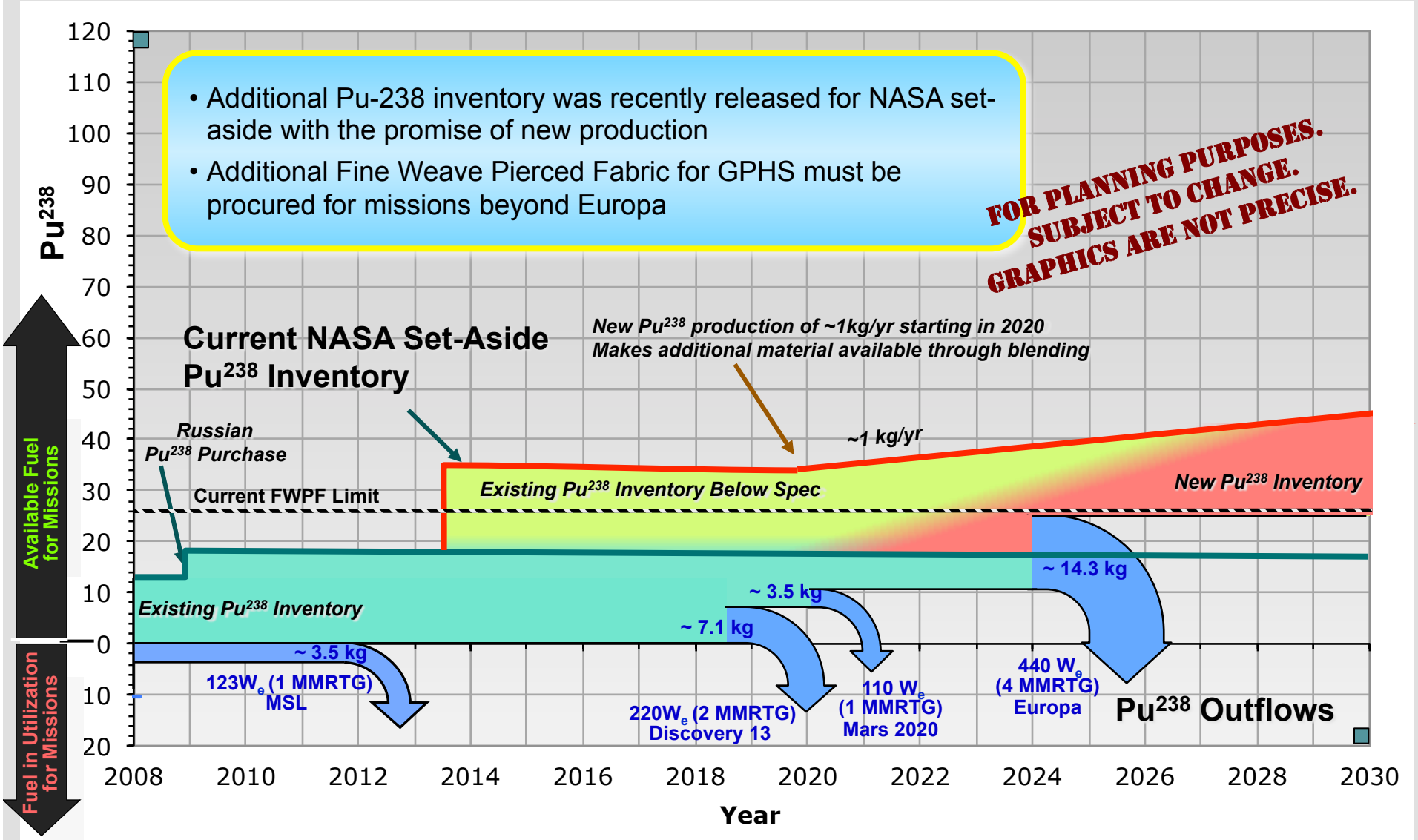

Long-Term Outlook

- NASA GRC will continue work on Stirling technology in FY14
- DOE remains a strong RPS Program partner
- Pu-238 production project will continue, sufficient to support future MMRTG Discovery-class missions every 5-7 years or less frequent New Frontiers/Flagship class
- RPS Program continuing to invest in process improvements for nuclear safety reviews and environmental approvals
- RPS Program continuing to develop energy conversion technologies of promise

In-Space Propulsion Technology

- Planetary Science continues to invest in propulsion & transportation technologies
  - Electric propulsion
  - Aerocapture & atmospheric entry systems
  - Advanced chemical propulsion & lightweight tanks
  - Systems & mission analysis tools
- Future funding is challenged as the current investments near maturity for flight systems

- The program is currently developing an integrated plan for continued investment in Hall and Ion Propulsion
- The program will be seeking comment and support for continued investment, goal to complete flight capabilities
  - Objective is to develop support in next years budget cycle

Planetary Science Technologies

- PSD is beginning the process to re-plan and re-structure planetary science technology investments
  - Address current budget realities
  - Provide for better integration and coordination across PSD and the Agency
  - Seeking partnerships and commercial interest
  - Reduce the burden of sustainment

- We will be looking for community input and support

Technology Infusion Study
Key Observations and Next Steps

Key Observations:

- End-User Community (industry/proposers) wants to use NASA technologies to support PSD missions
  - Technologies enable missions of interest
- Enabling technologies are not ready (reality & perception)
  - Need to resolve technology readiness issues
  - Development incomplete & Integration support insufficient
  - Proposers perceive SOMA to judge new technologies as high risk
- Current Incentives for technologies are not sufficient

Next Step:

- Follow up discussions to identify/quantify shortfalls, understand technology needs at associated readiness levels
  - Industry (East, West and Central) - Purpose: Gain Community Buy in, Open Dialogue to elaborate responses collected or missing
  - SOMA - Purpose: Discuss SOMA related responses to RFI
  - Assessment Groups – Purpose: Discuss and collect community inputs

Key Messages

- Planetary Science budget realities have forced the re-examination, re-prioritization, and re-structuring of planetary science technology investments
  - The ASRG flight development has been terminated as unaffordable in the near-term, and the ASRG project is being re-structured
  - The agency is re-planning the focus of continued Stirling power investment
  - Beginning in FY12, NASA began covering the cost of the DOE Plutonium Supply Project, and in FY15 NASA expects to begin paying for RPS base infrastructure & capability maintenance
  - The In-Space Propulsion Technology Program is developing an integrated investment plan for Hall and Ion thruster technologies

- We are looking for input and feedback from the Planetary Science Community on their priorities and interests in continued technology investments

For More Information

NASA is committed to a continuing dialogue with the community on the future of RPS and the missions they would enable or enhance.

leonard.a.dudzinski@nasa.gov
202-358-2553

rps.nasa.gov

Supplemental Material

- Slides beyond this one are as required

ASRG Forward

- Flight Systems
  - Fueled Qual Unit
  - F1 and F2 Unfueled Units by NLT 10/2016
    - Ready for D-13
    - Ready for NF-4
    - Ready for Mars 2018
    - Other
- “M1” Project
    - Integrate with S/C bus
    - Independent V&V

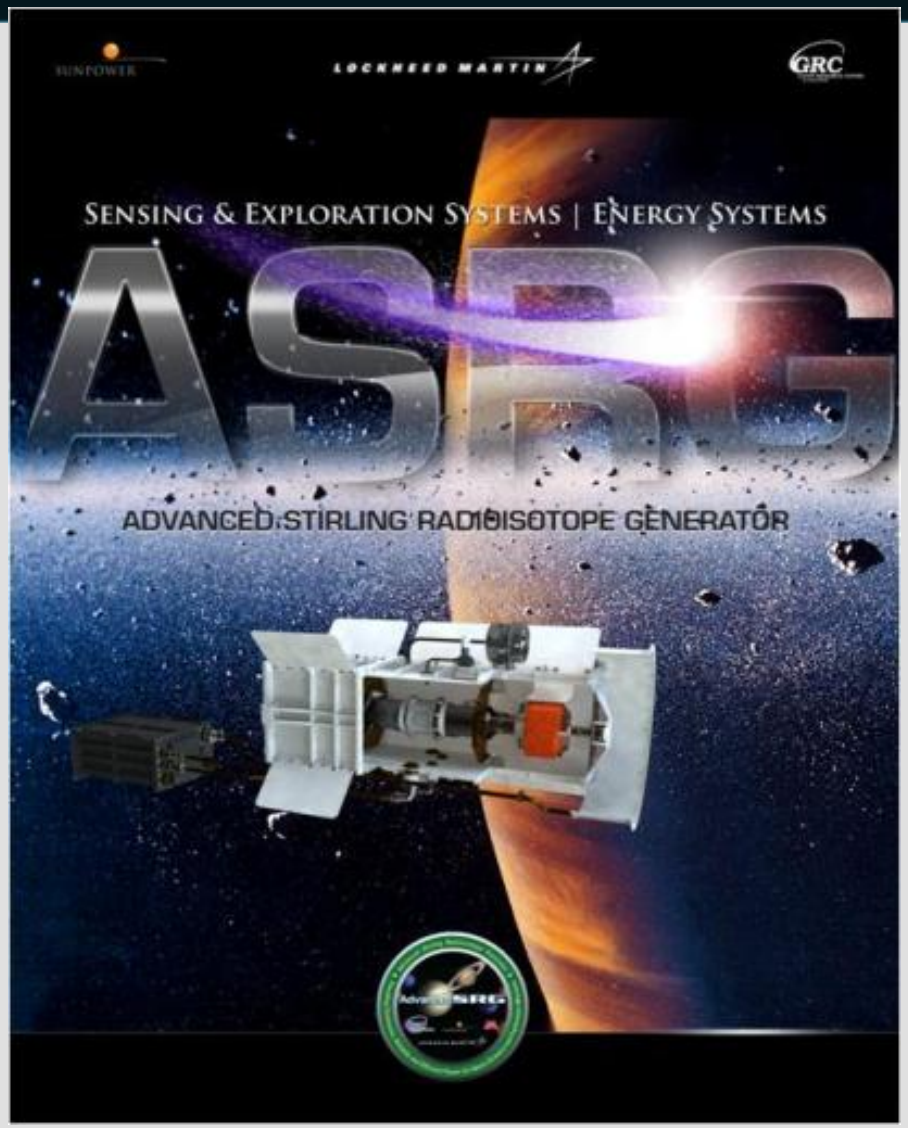

ORNL Pu-238 Project Concept

- Install new equipment in existing ORNL nuclear facilities
- Neptunium storage remains at INL
- Np shipped to ORNL as needed
- Target fabrication, ORNL laboratories
- Irradiations at HFIR and ATR
- Pu processing, ORNL hot cells
- Pu product shipped to LANL

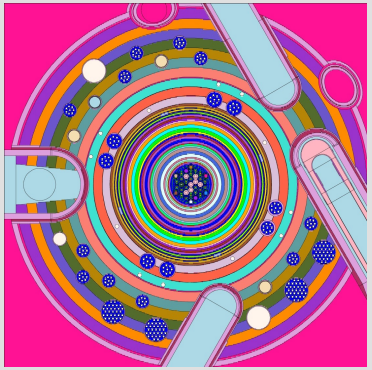

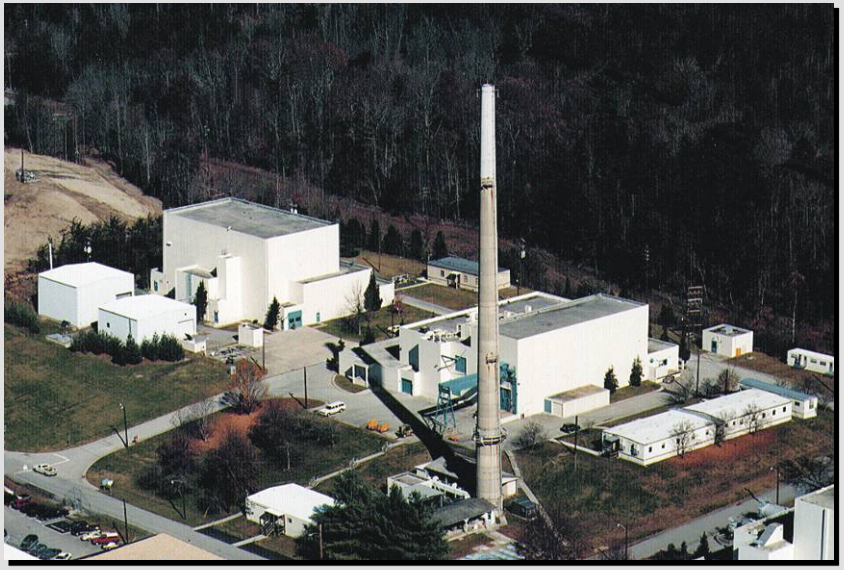

1.5 kg Pu-238 Average Oxide Production per year

Current Plans for Pu-238 Production

- Pu-238 Supply Project was initiated using NASA funds in FY 2012
- Planned production capacity is an average 1.5 kg oxide/year
- Required production level can be met with existing, operating isotope separations facilities at ORNL
- Target irradiation will be conducted in existing reactors (ATR and HFIR)
- The project has completed NEPA activities and alternatives analysis to select approach
- Tests are underway to finalize the HFIR target design and optimize needed processes
- If fully funded, the production capability will be fully operational by Spring 2021

Plutonium Supply vs Current Planetary Requirements
NASA Set-Aside